Art. 8036BU+8036AU

MILANO rainfall showerhead

- Offset showerhead to the left, 19 3/8" projection
- Rough and trim all made of solid brass
- Fixing system ensuring firm installation
- Anti-lime scale system
- Water flow restricted to 2.2 GPM

Fully inspectable for maintenance and cleaning

Project:

Room:

Date:

Comments:

Trim
Finishes:

☐	**Chrome**	86 02 8036BU
☐	**Nickel PVD**	86 95 8036BU
☐	**Matte Gun Metal PVD**	86 P5 8036BU
☐	**Matte British Gold PVD**	86 P6 8036BU
☐	**Matte Copper PVD**	86 P9 8036BU
☐	**Gold Plus**	86 01 8036BU
☐	**Brushed Stainless steel**	86 93 8036BU

Rough
Finishes:

☐	86 00 8036AU

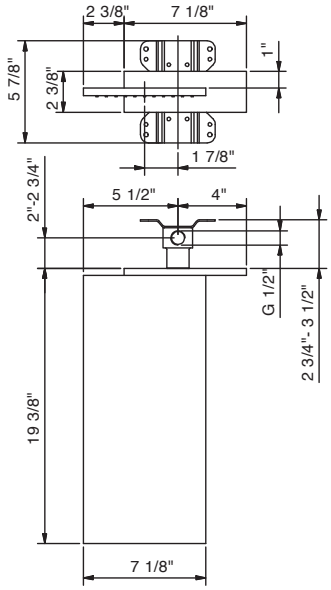

Certifications/Awards:

CAL GREEN