Art. S065SU

Deck-mount bathtub mixer

- 7 1/4" spout projection
- Without handles
- 5-hole
- 2-way diverter with turning knob
- FIT handshower
- 58" metal hose
- 90° ceramic cartridge
- 1/2" inlets
- Water flow restricted to 1.8 GPM for handshower
- Flexible supply lines
- 8 GPM @ 60 PSI

Note: Handles (2 PCS required) to be ordered separately, please refer to the "Handles" section.

Finishes:

☐	**Chrome**	65 02 S065SU
☐	**Matte Black**	65 13 S065SU

Project:

Room:

Date:

Comments:

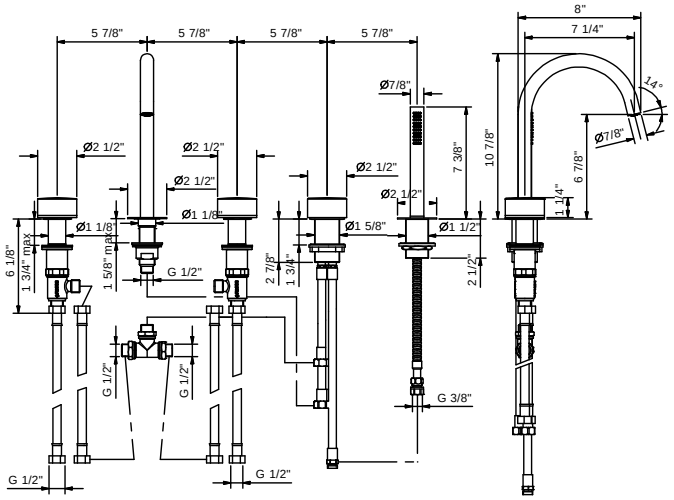

Certifications/Awards: