Art. N511SBU+5911AU

Three-hole bidet set, deck-mount hexagonal spout

- 5 3/8" spout projection
- Wall-mount remote controls
- Ceramic compression cartridges, 1/4 turn
- Push-up drain, 1 1/4"
- Flexible supply lines

Note:Handles (2 PCS required) to be ordered separately, please refer to the "Handles" section.

Project:

Room:

Date:

Comments:

Trim
Finishes:

☐	**Chrome**	29 02 N511SBU
☐	**Nickel PVD**	29 95 N511SBU
☐	**Matte Gun Metal PVD**	29 P5 N511SBU
☐	**Matte British Gold PVD**	29 P6 N511SBU
☐	**Matte Copper PVD**	29 P9 N511SBU
☐	**Pure Brass PVD**	29 Q7 N511SBU
☐	**Raw Metal PVD**	29 Q8 N511SBU
☐	**Gold Plus**	29 01 N511SBU

Rough
Finishes:
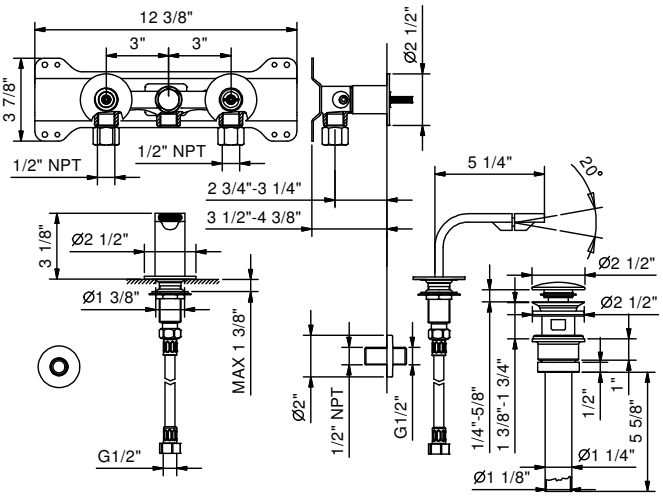
☐	19 00 5911AU