Art. M109BU+M011AU

Wall-mount washbasin mixer

- 5 7/8" spout projection
- Water flow restricted to 1.2 GPM
- 1/2" inlets
- Handle included

Drain to be ordered separately:
please select #9865U or #9867U

Project:

Room:

Date:

Comments:

Trim
Finishes:

☐ **Chrome** 24 02 M109BU
☐ **Matte Black** 24 13 M109BU

Rough
Finishes:

☐ 44 00 M011AU

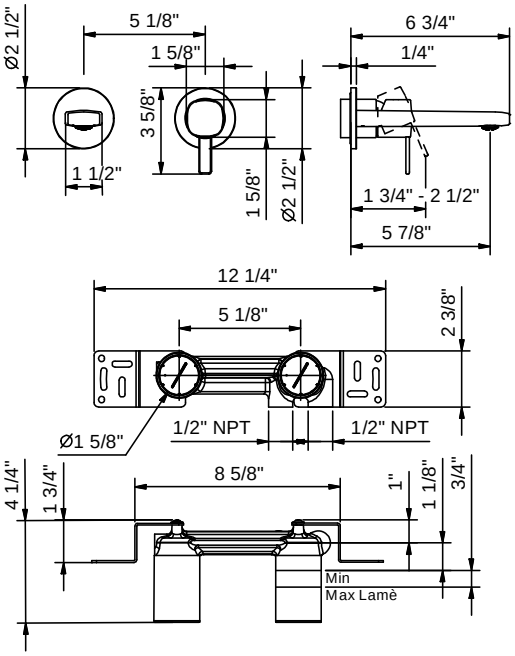

Certifications/Awards:

LEAD FREE

C US