1 1/4" Free flow drain (always open) - VENEZIA

Art. W097U

1 1/4" Free flow drain (always open)

Project:

Room:

Date:

Comments:

Finishes:
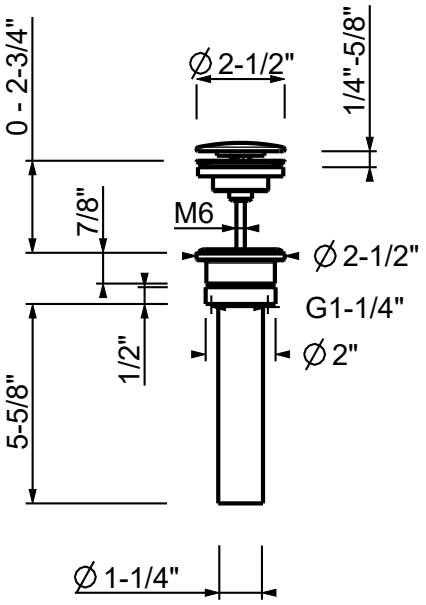
☐	**Chrome**	91 02 W095U
☐	**Nickel PVD**	91 95 W095U
☐	**Matte Gun Metal PVD**	91 P5 W095U
☐	**Matte British Gold PVD**	91 P6 W095U
☐	**Matte Copper PVD**	91 P9 W095U
☐	**Pure Brass PVD**	91 Q7 W095U
☐	**Raw Metal PVD**	91 Q8 W095U
☐	**Gold Plus**	91 01 W095U