Art. J062WU

Single-hole bidet mixer

- 5 5/8” spout projection
- Adjustable aerator
- Flexible supply lines
- Handles included
- Water flow restricted to 1.2 GPM

Drain to be ordered separately: please select #9865U, #W095U or #W097U.

Project:

Room:

Date:

Comments:

Finishes:

- ☐ **Matte Gun Metal PVD** 67 P6 J062WU
- ☐ **Matte British Gold PVD** 67 P5 J062WU
- ☐ **Deep Black PVD** 67 S1 J062WU

5 l/min aerator
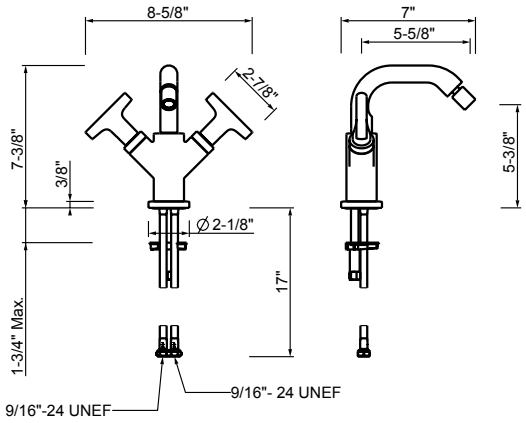
Pressure (bar)	flow rate (l/min)
0,5	2,34
1	5,09
2	5,1
3	5,38
4	5,39