Single-control washbasin mixer with extended spout, cylindrical handle - NOSTROMO

Art. E903U

Single-control washbasin mixer with extended spout, cylindrical handle

- 5 3/4" spout projection
- Water flow restricted to 1.2 GPM
- Pop-up drain, 1 1/4"
- Ceramic disc cartridge
- Flexible supply lines
- Handle included

Project:

Room:

Date:

Comments:

Finishes:

☐	**Chrome**	50 02 E903U
☐	**Matte Black**	50 13 E903U
☐	**Matte White**	50 29 E903U
☐	**Matte Gun Metal PVD**	50 P5 E903U
☐	**Matte British Gold PVD**	50 P6 E903U
☐	**Pure Brass PVD**	50 Q7 E903U
☐	**Raw Metal PVD**	50 Q8 E903U
☐	**Deep Black PVD**	50 S1 E903U
☐	**Brushed Stainless steel**	50 93 E903U

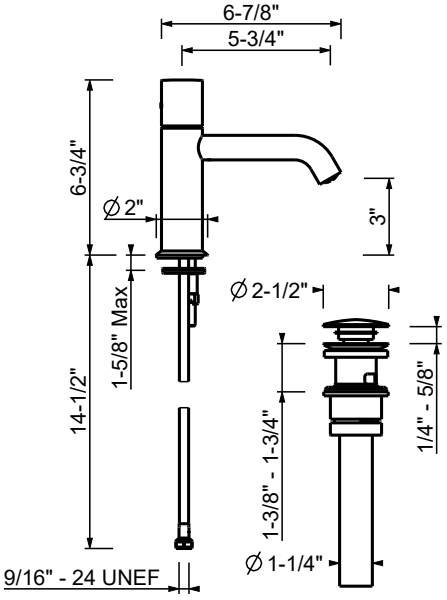

Certifications/Awards:

LEAD FREE

C US