FAIRMONT designs

3/4” Engineered Quartz Top

www.fairmontdesigns.com

TQ-R2522

SPECIFICATION SHEET

Features
Edge: Ogee
Bowl cut-out: Oval
Backsplash: Included (¾” thickness, 4”h)
Pre-drilled: 8” widespread

*Note all sizes of stone, quartz and ceramic products are nominal and are subject to variations of ± ¼”.

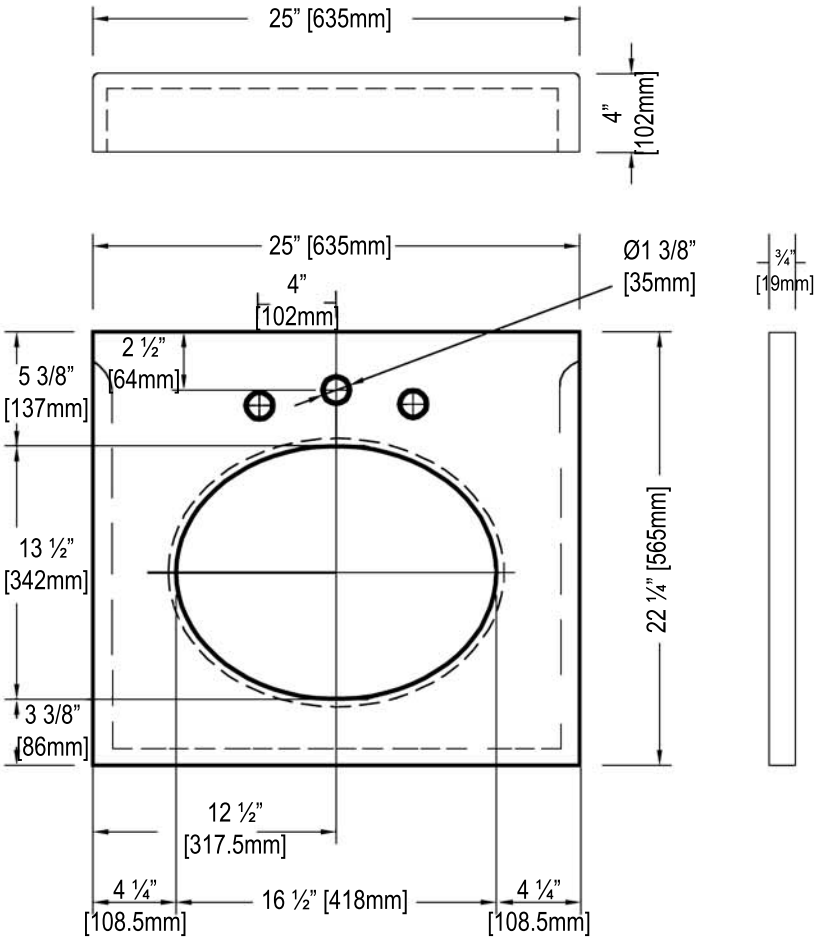

09/14/17

p 714 670 1171 f 714 736 0300