FAIRMONT designs.

m4 www.fairmontdesigns.com

1505-VH3018
30x18" Vanity

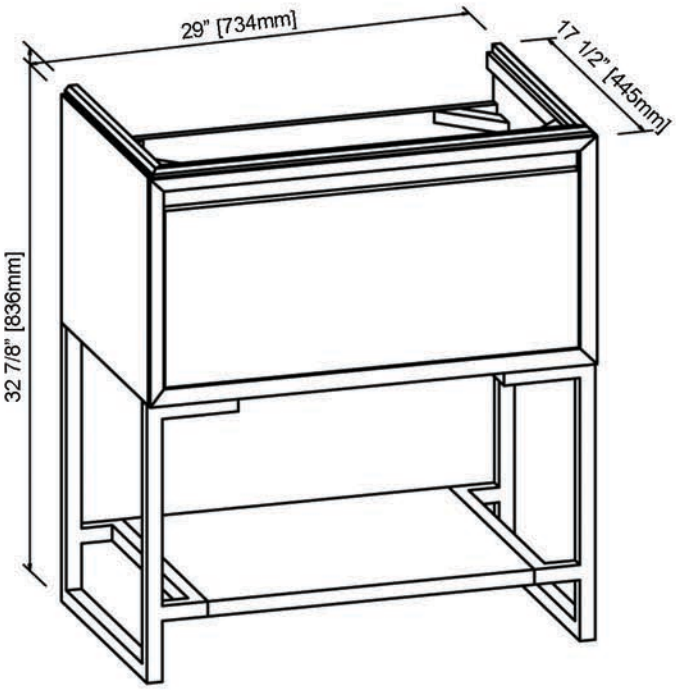

SPECIFICATION SHEET

Features

Materials: Hackberry Solids with Walnut Veneers
Drawer: 1
Drawer Box: 1/2" solid pine, English Dovetail
Drawer Glides: Undermount
Metal trim: 1-1/4" metal plate, Powder-coated Gunmetal Gray
Back panel: Fully covered
Side panels: 1" MDF with Walnut Veneers

Colors / Finish

1505-Natural Walnut

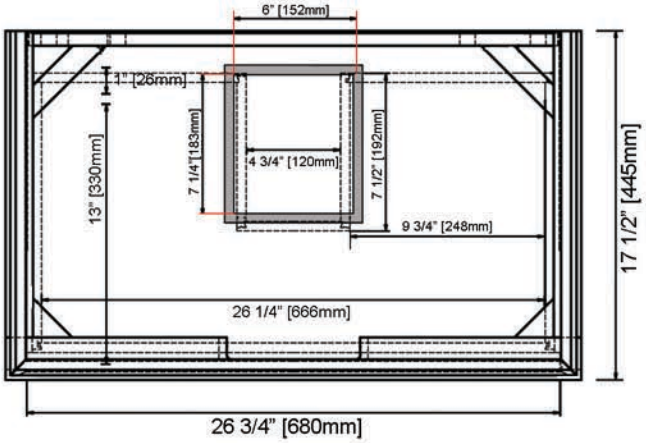

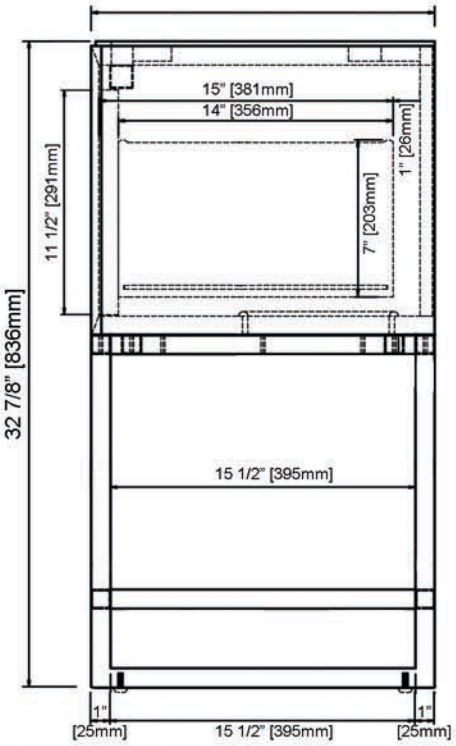

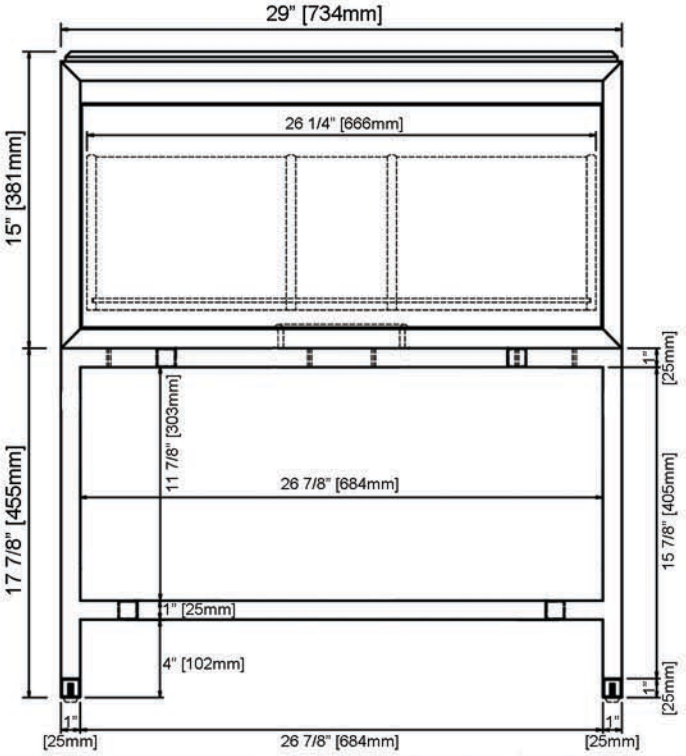

02/08/18