FOREMOST®

# CORSICANA
## 37″ VANITY COMBO

## SPECIFICATIONS

- Antique white finish
- 2 Slow close doors
- 2 Slow close drawers
- 1 False top drawer
- 1 Adjustable shelf
- Assembled vanity with pre-attached engineered stone top
- Vitreous china rectangular undermount sink pre-attached
- Antique pewter hardware
- 4″ hole faucet drilling
- Faucet not included

## OVERALL DIMENSIONS

940mm (W) x 559mm (D) x 984mm (H)
37″ (W) x 22″ (D) x 38¾″ (H)

## ITEMS TO BE SPECIFIED

**ANTIQUE WHITE**
Lily White Vanity Top

☐ **CNAWVT3722**
UPC: 721015433897

## SHIPPING

| | |
|---|---|
| **Cube** | 27.87 |
| **GW** | 208.56 lbs |

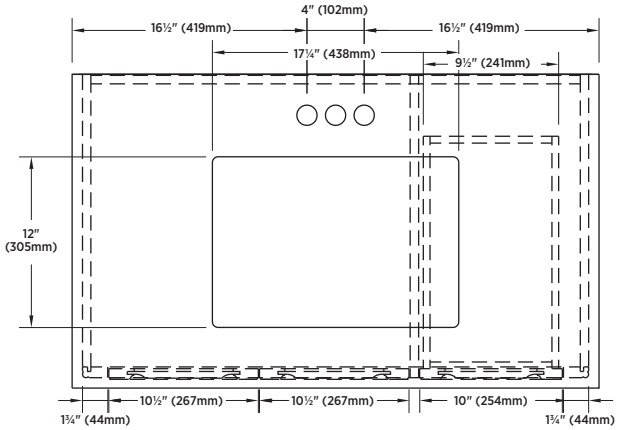


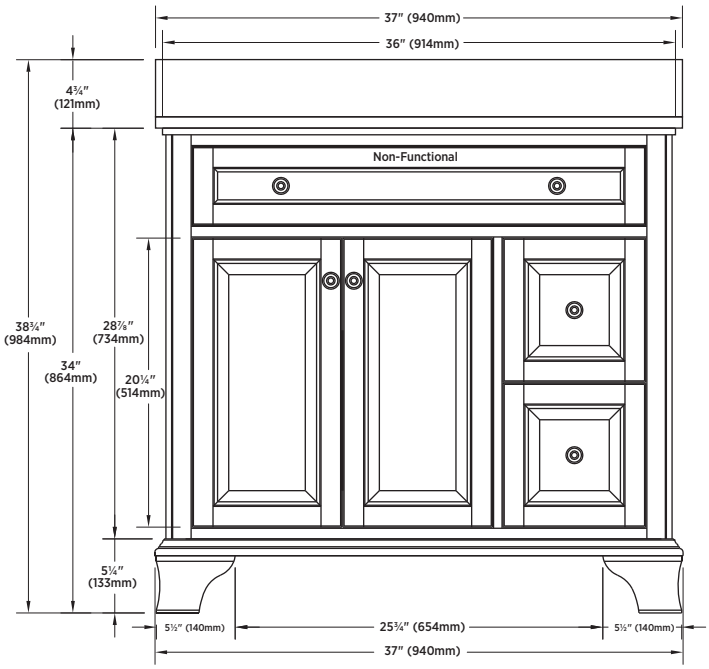


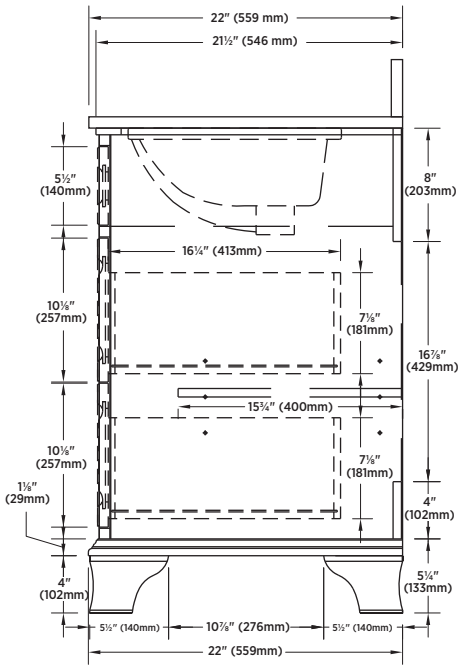


**NOTES:**
**Important:** Dimensions of product are nominal and may vary within the range of tolerances allowed. These measurements are subject to change or cancellation. No responsibility is assumed for use of superseded or voided pages.


**CANADA:** 5970 Chedworth Way, Unit B, Mississauga, Ontario L5R 4G5 **T:** (888) 256-7551 **F:** (905) 507-2006 www.foremostcanada.com