ELKAY®
SPECIFICATIONS

Dependabilt™ Stainless Steel 72" x 29-13/16" x 43-3/4" 18 Gauge One Compartment Sink w/ 24" Left and Right Drainboards and Stainless Steel Legs

Model(s) E1C24X24-2-24X

PRODUCT SPECIFICATIONS

Dependabilt™ Stainless Steel 72" x 29-13/16" x 43-3/4" 18 Gauge One Compartment Sink w/ 24" Left and Right Drainboards and Stainless Steel Legs. Sink is manufactured from 18 gauge 300 series Stainless Steel with a #4 Finish , Center drain placement.

Material:	300 series Stainless Steel
Finish:	#4 Finish
Gauge:	18
Weight Without Packaging:	86
Number of Bowls:	1
Sink Dimensions:	29" x 29-13/16" x 43-3/4"
Bowl 1 Dimensions:	24" x 24" x 12"
Drainboard Location:	Left and Right
Backsplash Height:	9
Leg Type:	Stainless Steel
Drain Size:	3-1/2" (89mm)
Drain Location:	Center

Special Note: Requires single splash mount faucet (not included).

Included with Product: **Stainless steel legs and adjustable bullet feet.**

A Century of Tradition and Quality.
For more than 100 years, Elkay has been making innovative products and providing exceptional customer care. We take pride in offering plumbing products that make life easier, inspire change and leave the world a better place.

Product Compliance: ASME A112.19.3/CSA B45.4
NSF 2

Accessory: ASME A112.18.2/CSA B125.2

Sinks are listed by IAPMO® as meeting the applicable requirements of the Uniform Plumbing Code®, International Plumbing Code®, and National Plumbing Code of Canada.

Warranty (PDF)

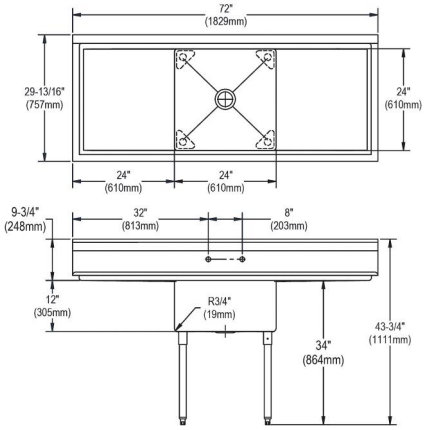

PART:_____QTY: _____

PROJECT:_____

CONTACT:_____

DATE:_____

NOTES:_____

APPROVAL:_____

In keeping with our policy of continuing product improvement, Elkay reserves the right to change product specifications without notice. Please visit elkay.com for the most current version of Elkay product specification sheets. This specification describes an Elkay product with design, quality, and functional benefits to the user. When making a comparison of other producers' offerings, be certain these features are not overlooked.

In keeping with our policy of continuing product improvement, Elkay reserves the right to change product specifications without notice. Please visit elkay.com for the most current version of Elkay product specification sheets. This specification describes an Elkay product with design, quality, and functional benefits to the user. When making a comparison of other producers' offerings, be certain these features are not overlooked.