DuraStyle # DS 5359

Mounting instructions

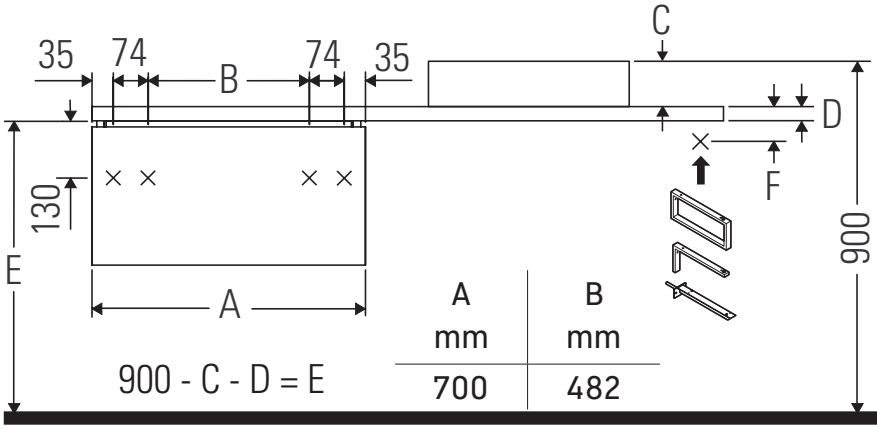

900 - C - D = E

A mm	B mm
700	482

F	D=30 mm	D=45 mm
	80	66
	80	66
	46	31

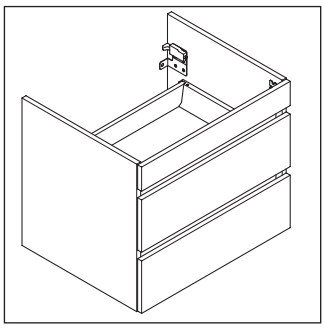

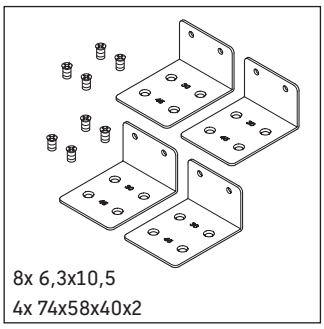

8x 6,3x10,5
4x 74x58x40x2

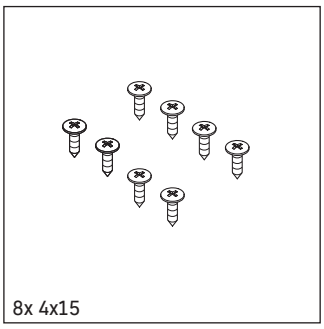

8x 4x15

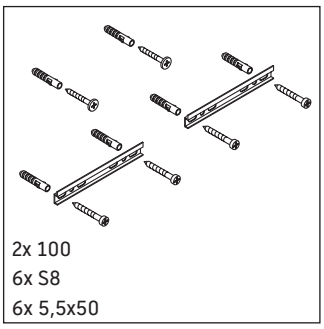

2x 100
6x S8
6x 5,5x50

Observe the drilling dimensions!

Follow all other installation instructions!

Instructions for use

The bathroom furniture range complies with the standards and guidelines applicable at the time of delivery and is designed for use in bathrooms.
Direct contact with water should be avoided, for example, when showering.
Ceramics wider than 600 mm must be fixed to the wall.
We reserve the right to make technical improvements and design modifications to the products illustrated.

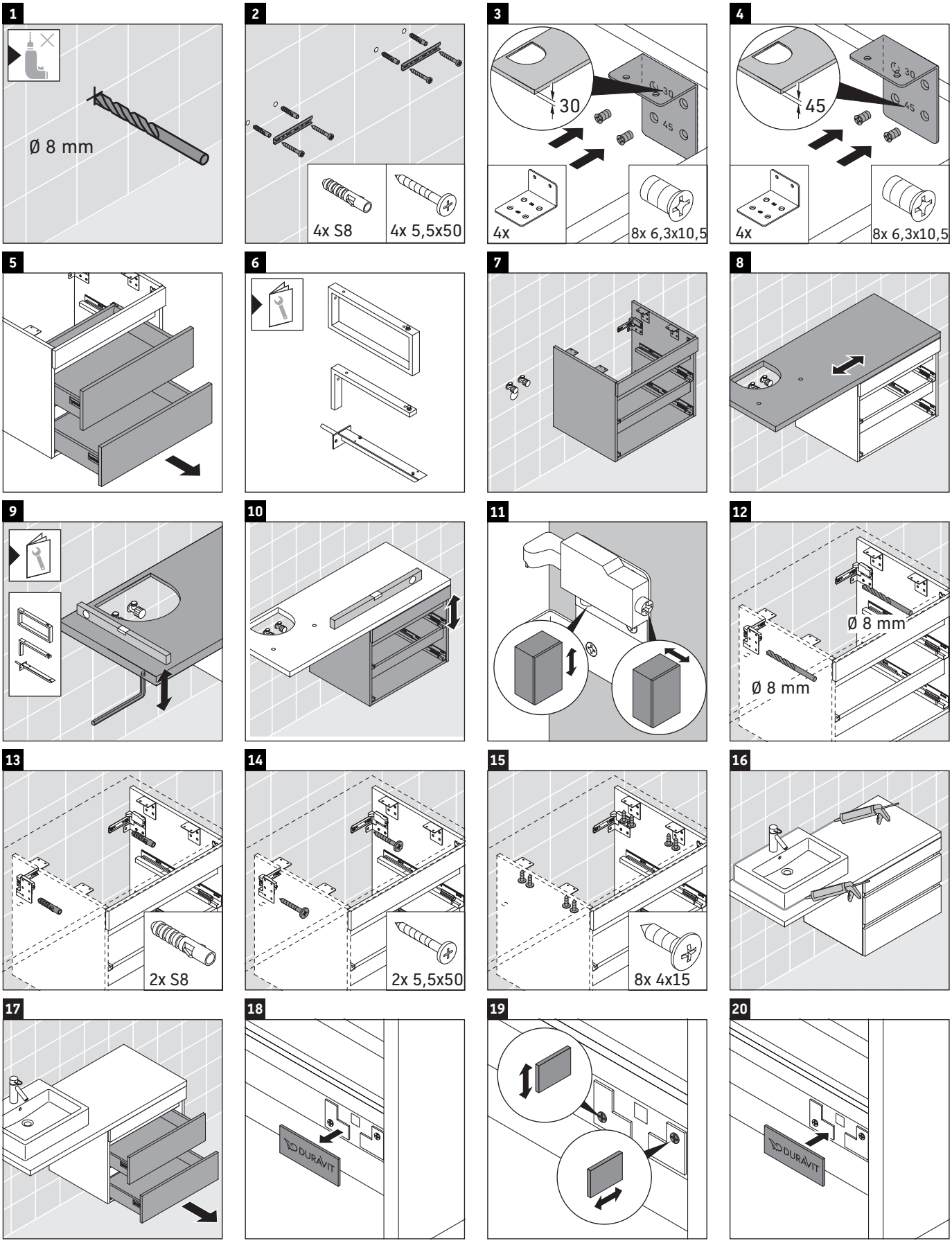

Best.-Nr. DS5359/19.01.1

Duravit AG, Werderstr. 36, 78132 Hornberg, Germany, Phone +49 78 33 70, Fax +49 78 33 700 289, info@duravit.de, www.duravit.de