Ketho # KT 6429

Mounting instructions

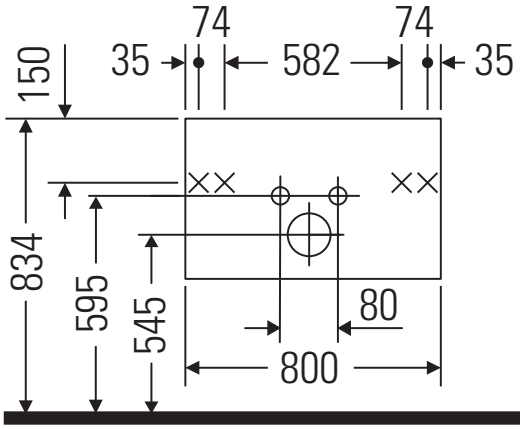

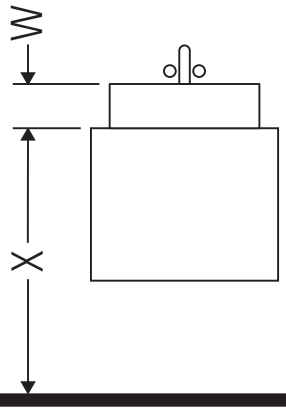

W mm	X mm
16	834

ME by Starck # 233683

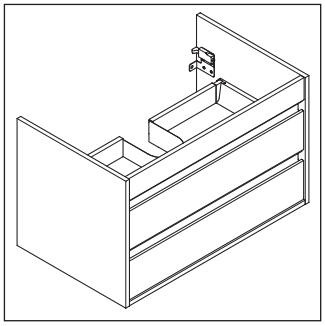

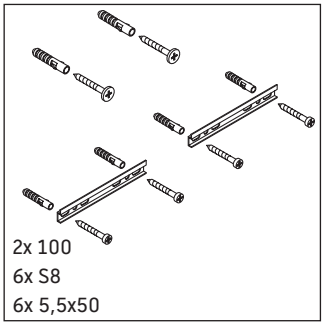

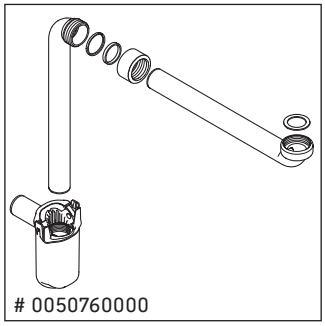

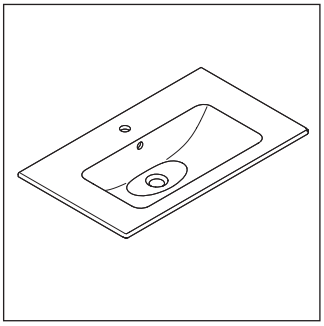

Instructions for use

The bathroom furniture range complies with the standards and guidelines applicable at the time of delivery and is designed for use in bathrooms. Direct contact with water should be avoided, for example, when showering.

We reserve the right to make technical improvements and design modifications to the products illustrated.

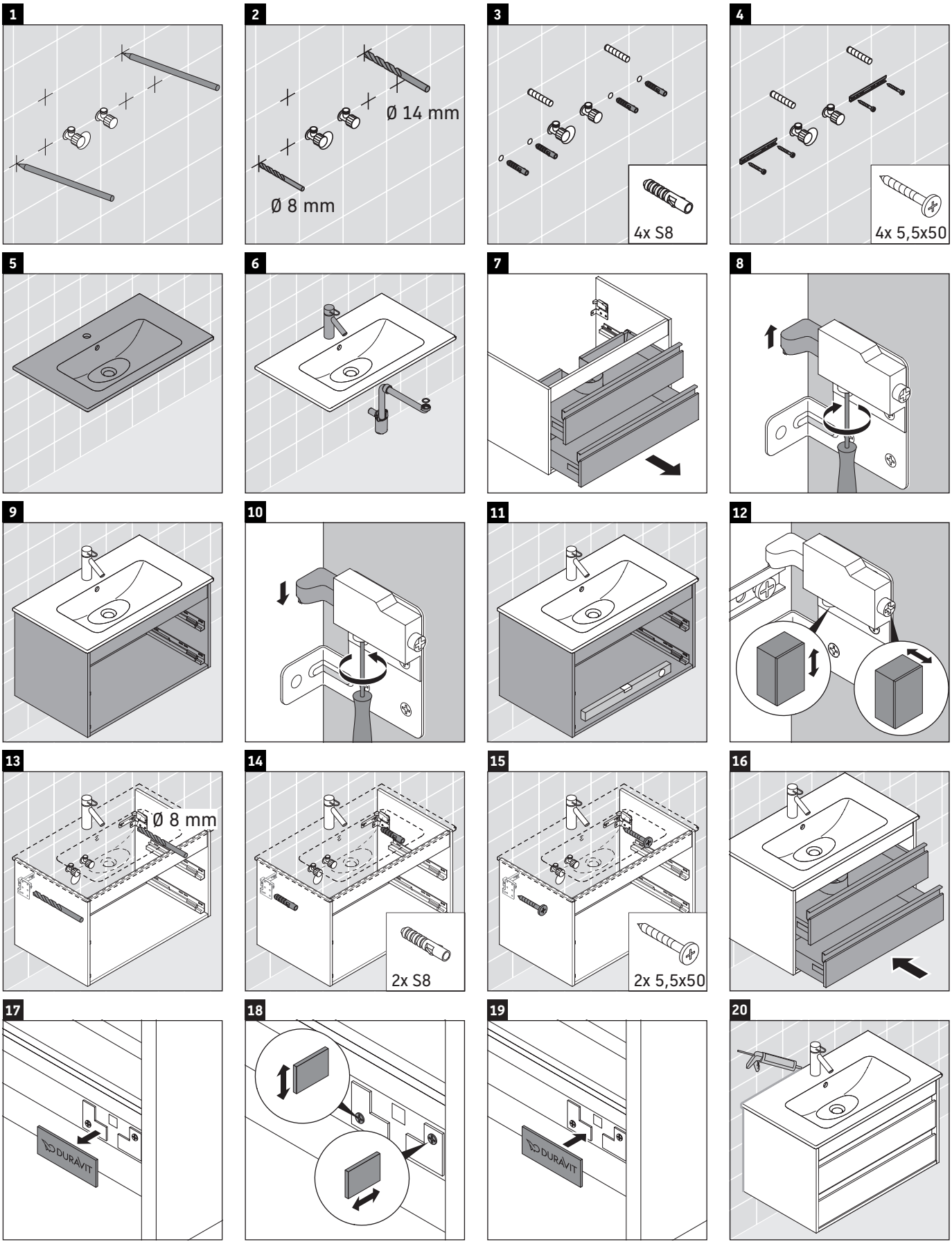

Best.-Nr. KT6429/18.07.2

Duravit AG, Werderstr. 36, 78132 Hornberg, Germany, Phone +49 78 33 700, Fax +49 78 33 70 289, info@duravit.de, www.duravit.de