Taos Deck-mount Tub Faucet with Handshower
17-03-T
DTHS-S-RGH

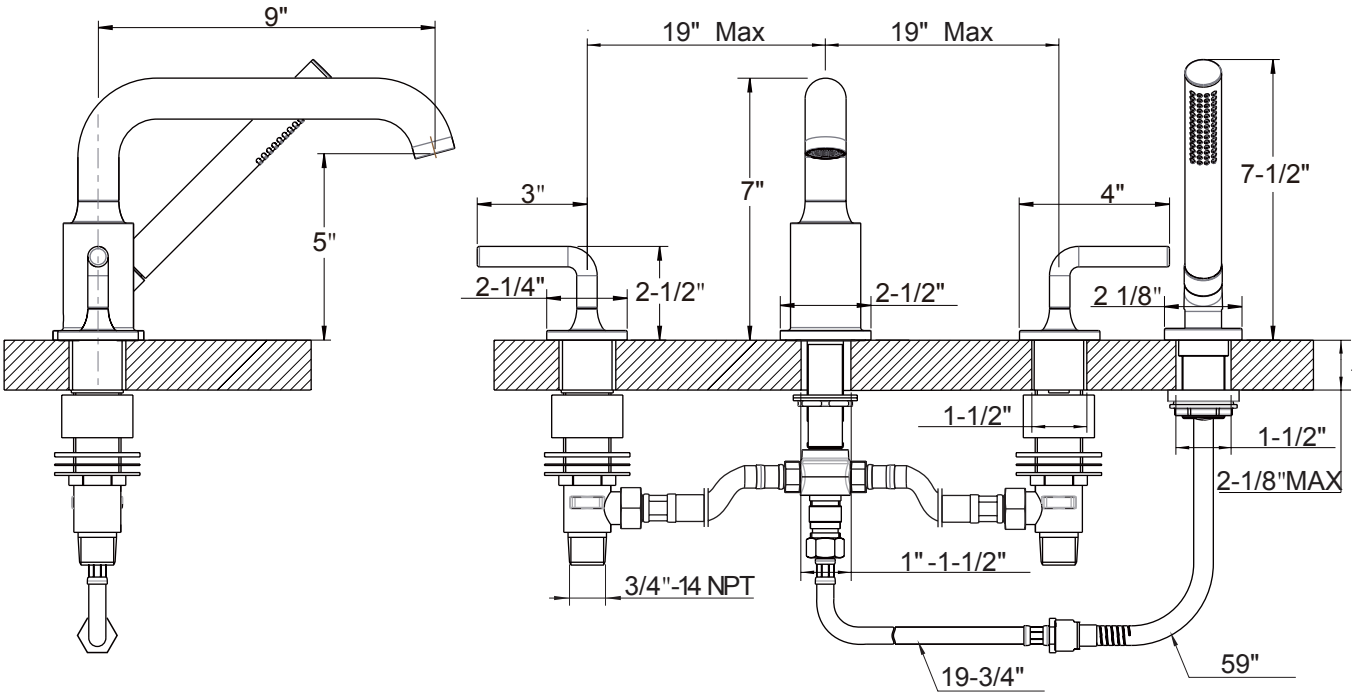

crosswater
LONDON