CRYSTORAMA LIGHTING

Crystorama.com

ASSEMBLY INSTRUCTION MODEL # BGT-339-SG-CL

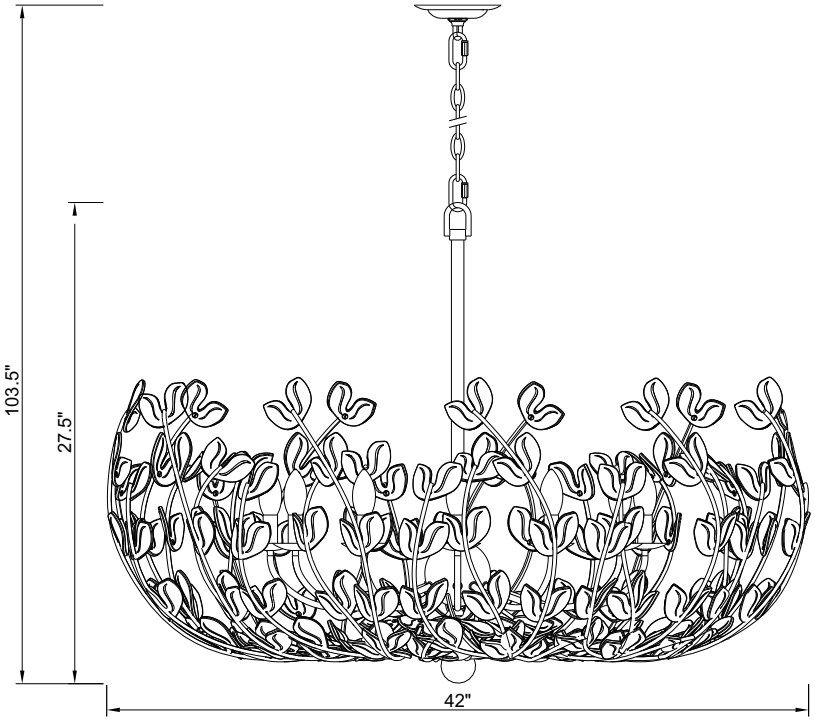

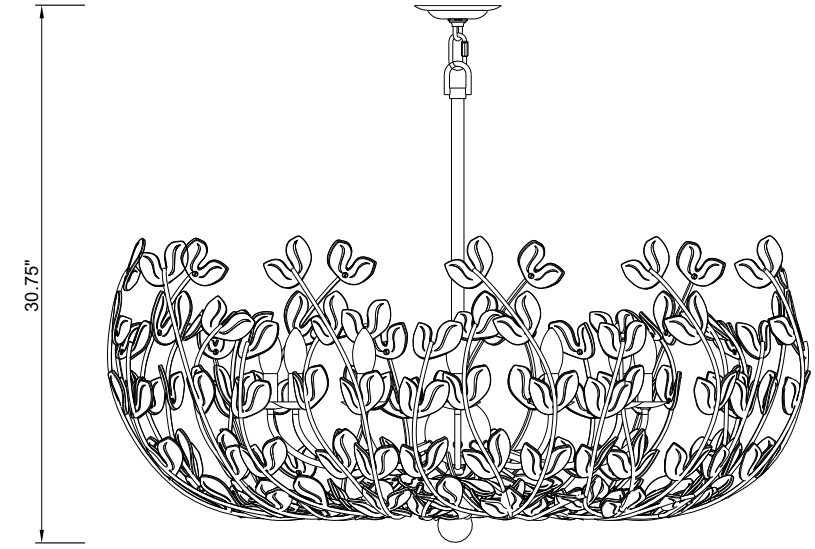

GLASS LEAVES A=187PCS

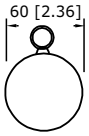

GLASS Ball =1PC

(Noted:77pcs glass leaves have already been assembled onto the lamp body.)

Attention: When removing the lamp body from the carton, pleasebe careful to remove the cardboard inside the box. Two people are recommended to hold the inner part of the arm. At the same time, to lift the body. Do not directly grab the farther end of the arm to avoid deformation of the lamp body.

WARNING:

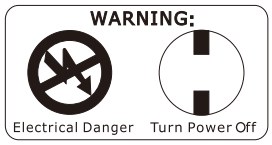

All electrical components must be installed by a licensed electrician in accordance with the National Electric Code and the appropriate local electrical codes.

You will need 12 -Candelabra Base Bulb
40 Watts Recommended 60 Watts Max.
USE LED BULBS FOR EXTENDED USE
THIS FIXTURE IS DAMP RATED

How to Install

1. Remove the frame and foam block from the box. Place the pearl wrap over the foam block, then carefully turn the frame upside down so it rests against the foam block. Gently remove the pearl wrap from beneath each glass leaf that is pre-attached to the frame.
2. Lay the frame gently inside the foam block with the metal branch facing upward. Before assembly, inspect all glass leaves and tighten any loose screws using the provided screwdriver. Do not overtighten. Starting from the bottom of the frame, install each glass leaf as shown, ensuring the curved side faces inward and follows the direction of the branch. Tighten each screw until secure, taking care not to overtighten, as this may cause the glass to crack or break.
3. Screw the center stem kit onto the light cluster.
4. Decide the preferred hanging height and choose the correct length of chain needed.
5. Attach one end of the 1/4 IPS threaded pipe onto the ceiling joist and secure with hexnut. The other end of the threaded pipe should protrude through the outlet box.
6. Assemble the screw collar loop, nipple, hexnut and hickey to the 1/4 IPS threaded pipe and adjust overall length to allow the collar ring to hold the canopy flush to ceiling.
7. Attach the chain to the fixture loop. Position the screw collar ring over the upper end of the chain. Open the end of the quick link and attach one end to the screw collar ring and the other end to the fixture loop. Secure the links.
8. Weave the fixture wires, ground wires and safety cable through the chain and screw collar loop exiting through the side of hickey. Proceed with the wire connections. Continue to run the safety cable through the outlet box and Wrap the it around the ceiling joist and secure with the locking device.
9. Screw the glass ball onto the bottom of the frame.

⚠ **WARNING:** This product can expose you to Lead, which is known to the State of California to cause cancer and/or birth defects or reproductive harm. For more information go to www.P65Warnings.ca.gov.

CRYSTORAMA LIGHTING

Crystorama.com

PART NUMBER MODEL # BGT-339-SG-CL

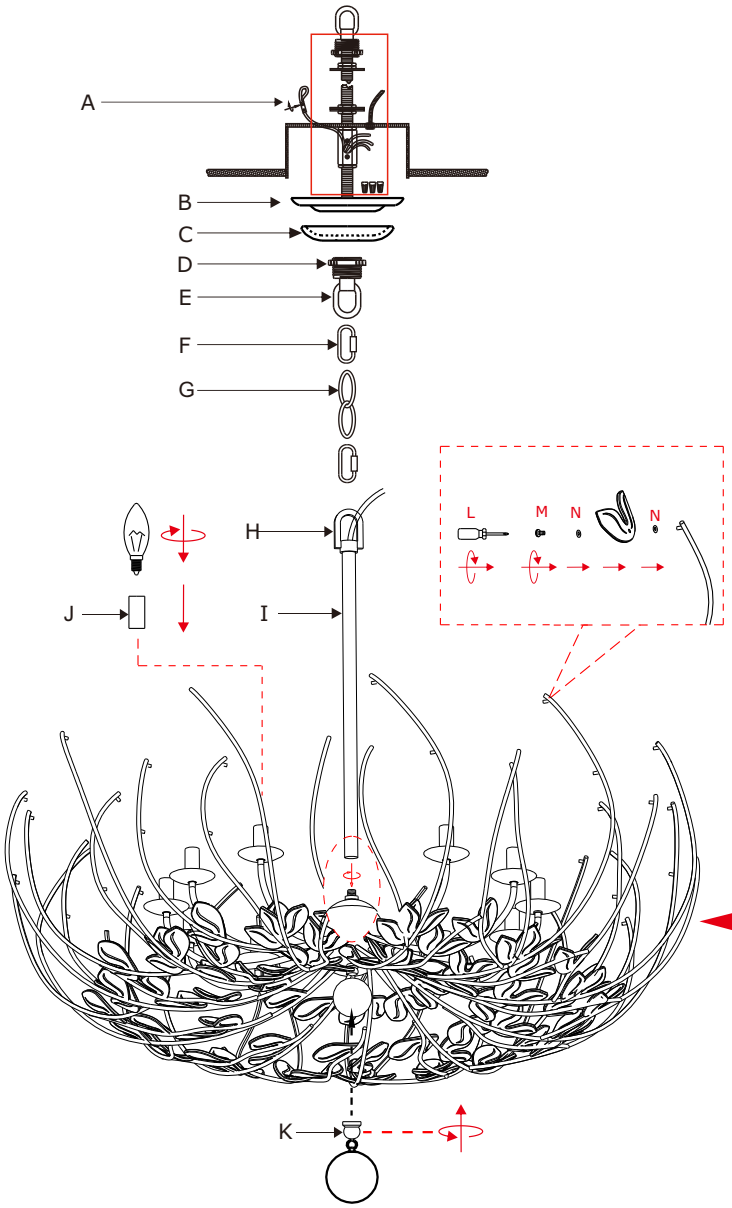

Part Number

A. (1) - Mounting Hardware
B. (1) - Canopy(W5.5",H0,75") #XRE330SGCAN5.5IN
C. (1) - Glass Dish(W3.5",H0.76") #XRE330CLGLADIS3.5IN
D. (1) - Collar Ring
E. (1) - Collar Loop
F. (2) - Quick Link
G. (1) - Hanging Chain(72",5mm) #XRE339SGCHA5MM
H. (1) - Fixture Loop
I. (1) - Center Stem(19mm, 17.6") #XRE339SGSTEM17.6IN
J.(12) - Candle Sleeve(W1",H2") #XRE334SGCDL2IN
K.(1) - Finial
L.(1) - Screwdriver
M.(187) - Screw
N.(374) - Plastic Washer
O.(187) - Glass Leaves A #XRE330CLGLA3.1IN
P.(1) - Glass Ball #XRE339SGCLGLA60MM

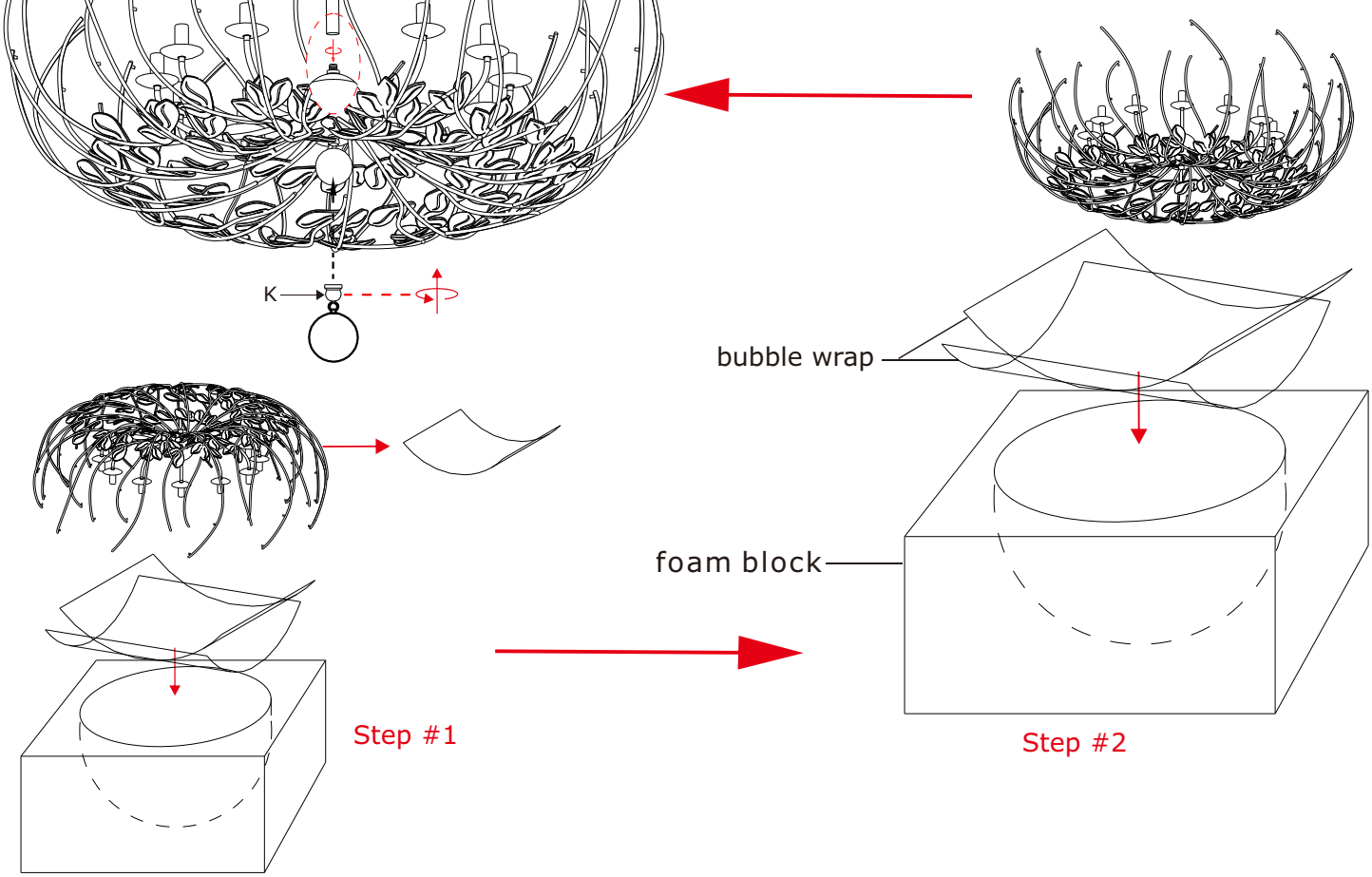

SAFETY CABLE INSTALLATION INSTRUCTIONS

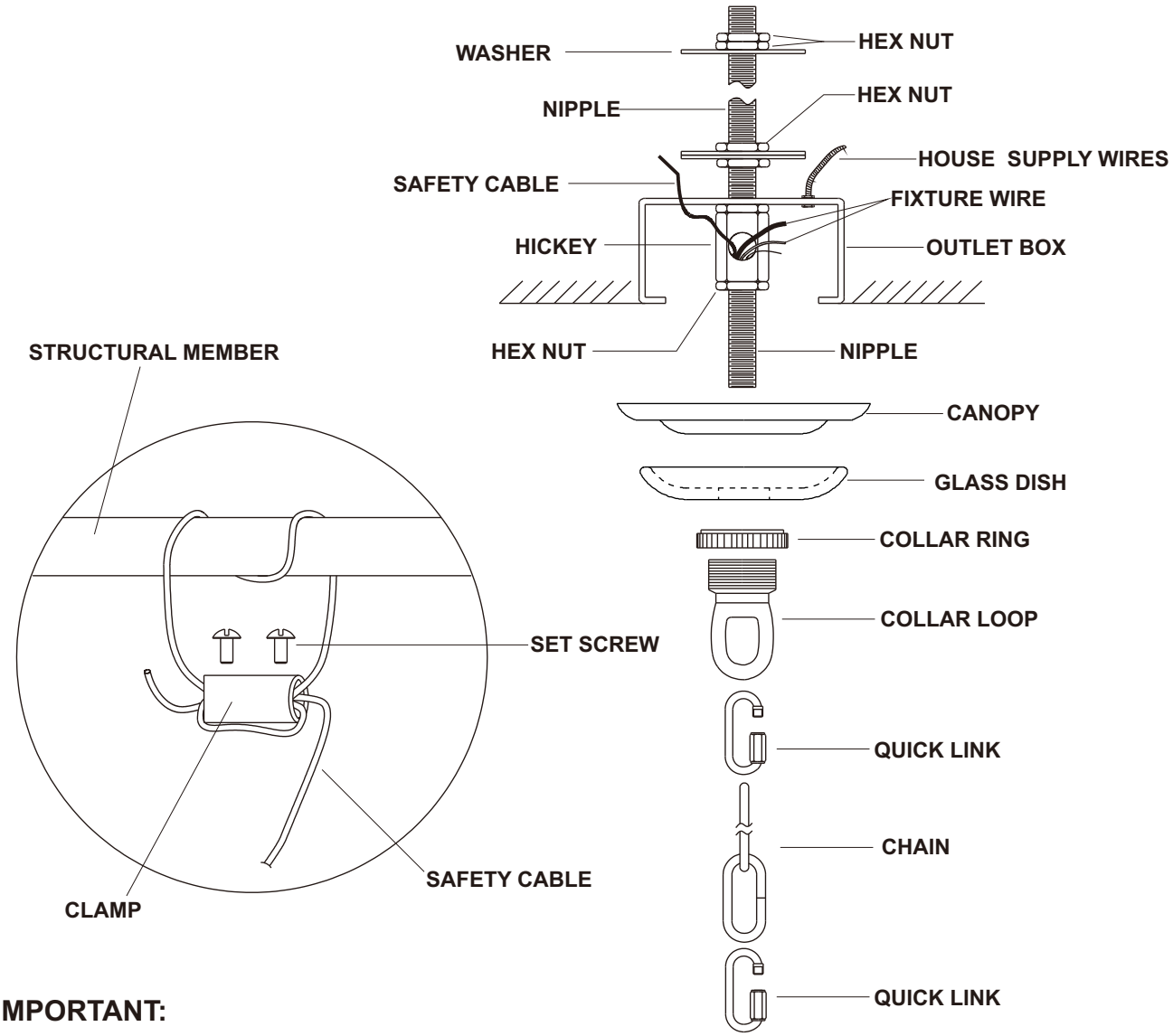

IMPORTANT:

FOR A SAFE AND SECURE INSTALLATION, THESE FIXTURES MUST BE IN MEANS OF SUPPORTS THAT ARE INDEPENDENT OF THE OUTLET BOX.

SUGGESTED INSTALLATION:

1. Provide a 1/4 IPS pipe with one end securely mounted to a beam or a structural member. The other end should protrude through the center of the outlet, as shown.
2. Assemble the screw collar loop, nipple, hex nuts and hickey to center 1/4IPS support pipe and adjust overall length to allow the collar ring to hold the canopy flush to the ceiling. When the adjustments have been completed secure the hex nut, as shown
3. Use one quick link to connect fixture loop and the bottom of chain. Slide the screw collar ring over the upper end of the chain, through the (Finished side down). Then use another quick link to connect collar loop and the top of chain.
4. Lace the fixture wires, ground wires and safety cable through the chain and screw collar loop, exiting through the side of HICKEY. Proceed to attach the FIXTURE GROUND WIRE to HOUSE GROUND WIRE using wire connector. Using wire connectors, connect the HOUSE WHITE WIRE to the FIXTURE SUPPLY WIRE(WHITE OR RIBBED SIDE); connect the HOUSE BLACK (or RED) WIRE to the FIXTURE SUPPLY WIRE (BLACK or SMOOTH SIDE). Wrap all connectors with approved electrical tape. Wrap safety cable around outlet box brace and pull cable taut. Secure cable with the clamp and (2) set screws provided, as shown.
5. Push the CANOPY upward over the OUTLET BOX. Be sure that all wires are carefully tucked into the OUTLET BOX cavity. Secure canopy against ceiling by threading CANOPY LOCK RING onto the CANOPY LOOP. Tighten until snug.

* * * ATTENTION-If the Mounting Bracket is being used in the installation method, you will need an outlet box (not supplied) rated for 100lbs or more * * *

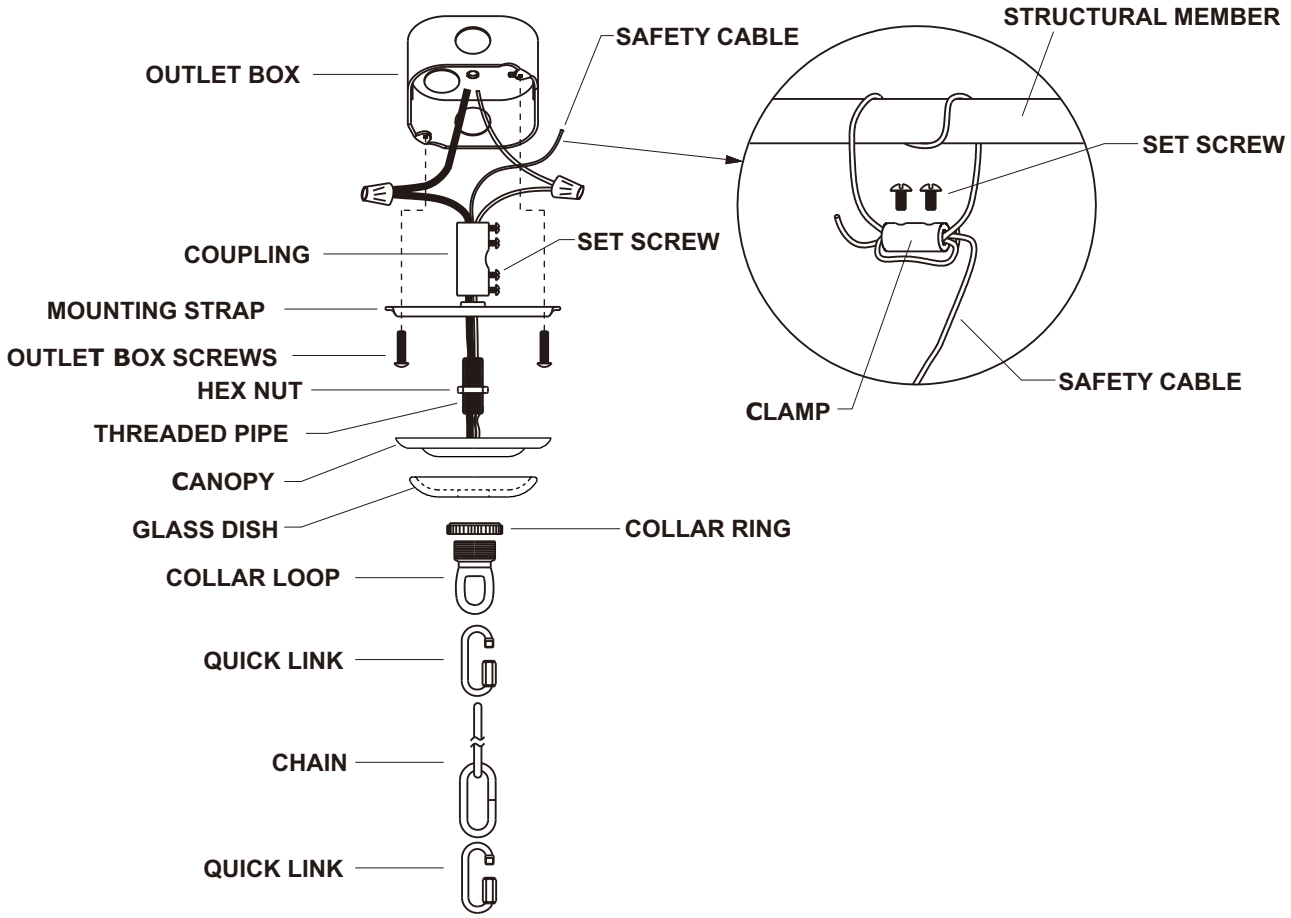

NOTE:NEC CODE (314.24) requires that ceiling outlet boxes in the United States support up to 50 lbs. This fixture exceeds 50 lbs. and must be installed using an outlet box approved for up to 100 lbs. or independently of the existing outlet box. Installation hardware and instructions are provided for both.

MOUNTING TO A 100 lb. MAX.APPROVED OUTLET BOX.

1. **Feed the Support cable from the fixture through the outlet box. Drill 3/16 ″ diameter hole in outlet box if no other holes are available. Wrap the safety cable around the structural member and pull cable taut. Secure the cable with the clamp and (2) set screws provided.**
2. **Screw the threaded rod into the coupling until the threaded rod is flush with the top of the coupling. Secure in place by tightening the sets screw.**
3. **Pass the threaded pipe through the mounting strap.**
4. **Thread the screw collar loop onto the threaded rod until the threaded rod is flush with hole on lower side of screw collar loop.**
5. **Secure screw collar loop in place by tightening the hex nut.**
6. **Assemble the mounting strap to outlet box using screws provided with outlet box.**
7. **Use one quick link to connect fixture loop and the bottom of chain. Slide the screw collar ring over the upper end of the chain, through the (Finished side down). Then use another quick link to connect collar loop and the top of chain.**
8. **Lace the fixture wires, ground wires and safety cable through the chain and screw collar loop. Proceed to attach the FIXTURE GROUND WIRE to HOUSE GROUND WIRE using wire connectors. Using wire connectors, connect the HOUSE WHITE WIRE to the FIXTURE SUPPLY WIRE(Please also make this line the same font as everything else); the FIXTURE SUPPLY WIRE (BLACK or SMOOTH SIDE). Wrap all connectors with approved electrical tape.**
9. **Push the CANOPY upward over the OUTLET BOX. Be sure that all wires are carefully tucked into the OUTLET BOX cavity. Secure canopy against ceiling by threading CANOPY LOCK RING onto the CANOPY LOOP. Tighten until snug.**