CRYSTORAMA LIGHTING

Crystorama.com

ASSEMBLY INSTRUCTION MODEL # BGT-338-SG-CL

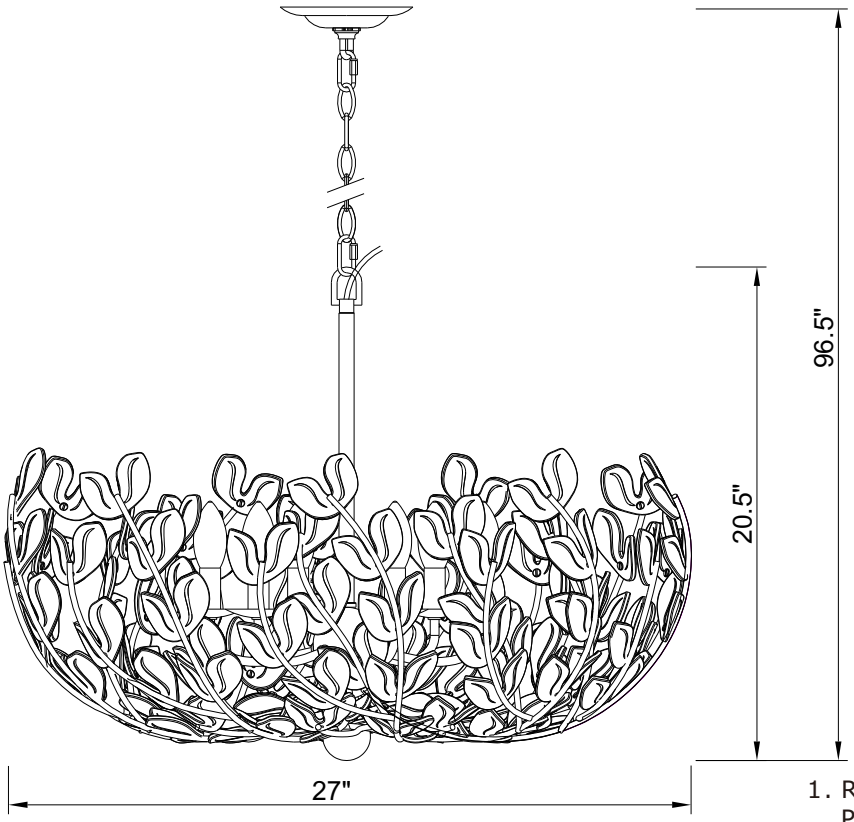

GLASS LEAVES A=126PCS

(Noted:54pcs glass leaves have already been assembled onto the lamp body.)

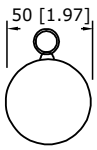

GLASS Ball =1PC

WARNING:

All electrical components must be installed by a licensed electrician in accordance with the National Electric Code and the appropriate local electrical codes.

You will need 6 -Candelabra Base Bulb

40 Watts Recommended 60 Watts Max.

USE LED BULBS FOR EXTENDED USE

THIS FIXTURE IS DAMP RATED

How to Install

1. Remove the frame and foam block from the box. Place the pearl wrap over the foam block, then carefully turn the frame upside down so it rests against the foam block. Gently remove the pearl wrap from beneath each glass leaf that is pre-attached to the frame.
2. Lay the frame gently inside the foam block with the metal branch facing upward. Before assembly, inspect all glass leaves and tighten any loose screws using the provided screwdriver. Do not overtighten. Starting from the bottom of the frame, install each glass leaf as shown, ensuring the curved side faces inward and follows the direction of the branch. Tighten each screw until secure, taking care not to overtighten, as this may cause the glass to crack or break.
3. Screw the center stem kit onto the light cluster.
4. Place the candle sleeve onto the socket, and insert recommended bulb(not included).
5. Decide the preferred hanging height and choose the correct length of chain needed.
6. Install the mounting bracket onto the outlet box.
7. Raise the fixture up over the outlet box and do the wire connection. Secure the canopy and glass dish onto the mounting bracket using the collar ring.
8. Screw the glass ball onto the bottom of the frame.

⚠ **WARNING:** This product can expose you to Lead, which is known to the State of California to cause cancer and/or birth defects or reproductive harm. For more information go to www.P65Warnings.ca.gov.

CRYSTORAMA LIGHTING

Crystorama.com

PART NUMBER MODEL # BGT-338-SG-CL

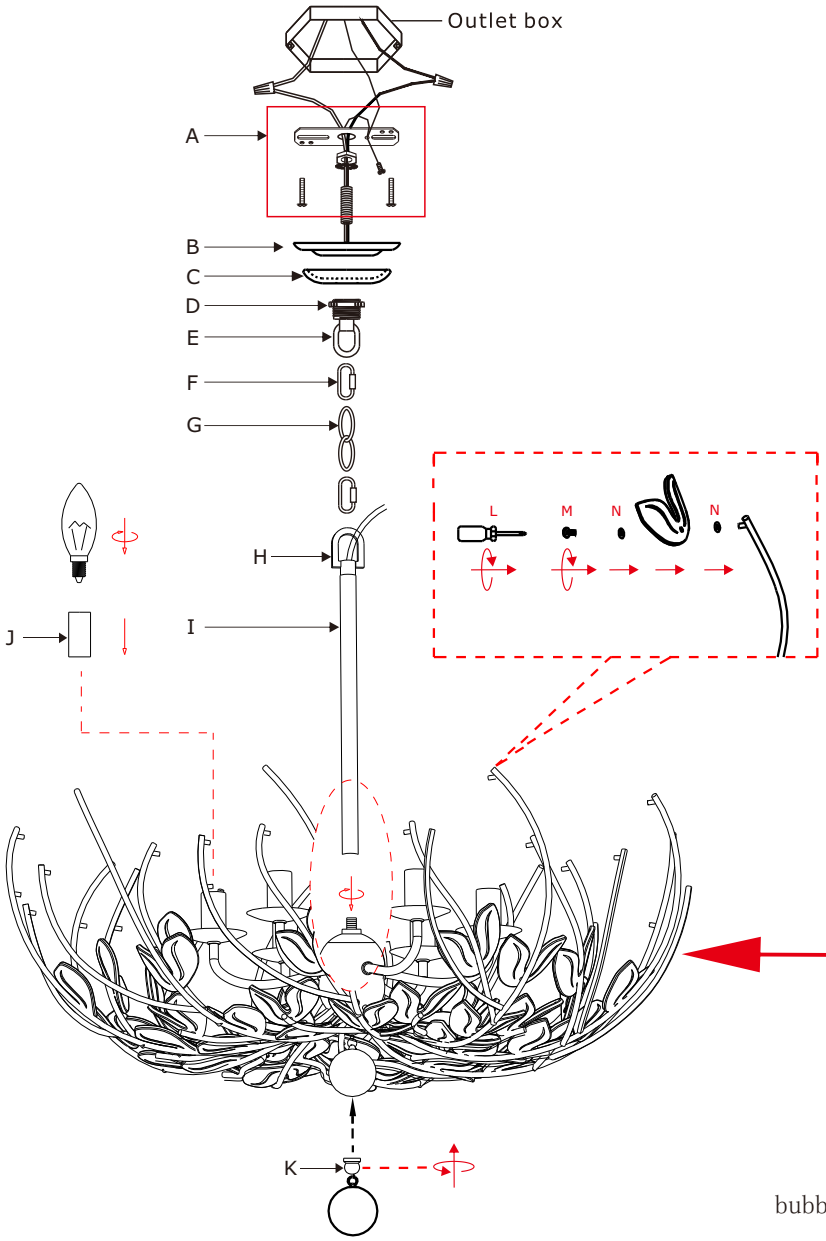

Part Number

A. (1) - Mounting Hardware
B. (1) - Canopy(W5.5",H0,75") #XRE330SGCAN5.5IN
C. (1) - Glass Dish(W3.5",H0.76") #XRE330CLGLADIS3.5IN
D. (1) - Collar Ring
E. (1) - Collar Loop
F. (2) - Quick Link
G. (1) - Hanging Chain(72",4mm) #XRE334SGCHA4MM
H. (1) - Fixture Loop
I. (1) - Center Stem(15.3mm, 12") #XRE336SGSTEM12IN
J.(6) - Candle Sleeve(W1",H2") #XRE334SGCDL2IN
K.(1) - Finial
L.(1) - Screwdriver
M.(126) - Screw
N.(252) - Plastic Washer
O.(126) - Glass Leaves A #XRE330CLGLA3.1IN
P.(1) - Glass Ball #XRE338SGCLGLA50MM

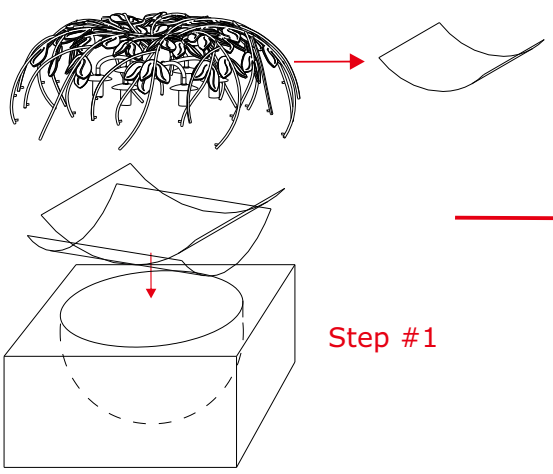

Step #1

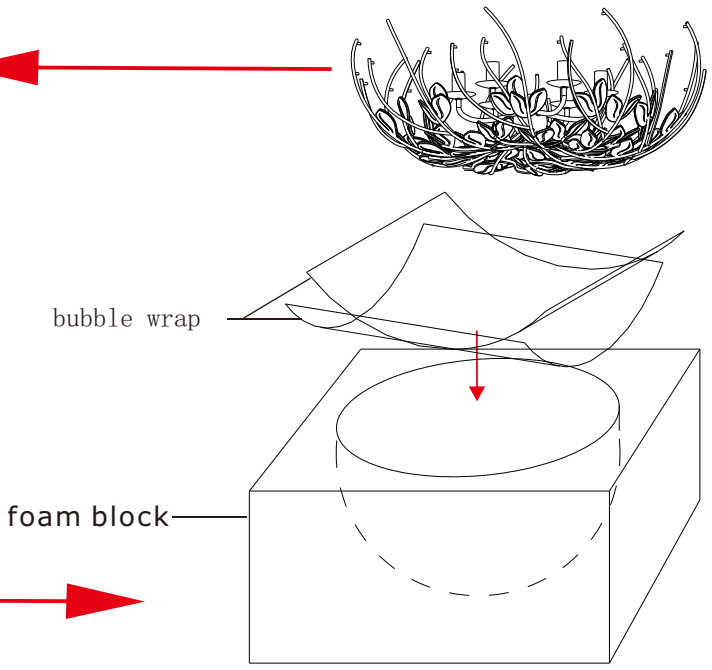

Step #2