California Faucets®

Humboldt™

ROMAN TUB HANDSHOWER & DIVERTER TRIM

TO-67.13.20

Features

- *Max flow rate: 2.0 gpm (7.6 L/m)*
- *Handshower: 1/2" MIP inlet with self-clean rubber jets*
- *Handshower elbow: 1/2" FIP swivel nut with 1/2" MIP inlet*
- *Hose: 84" black poly braided hose. Provides durable, quiet & no damage to trim finish during operation*
- *Diverter valve (DDV-R) sold separately*
- *Solid brass construction*
- *Over 30 finishes including 15 PVD finishes*

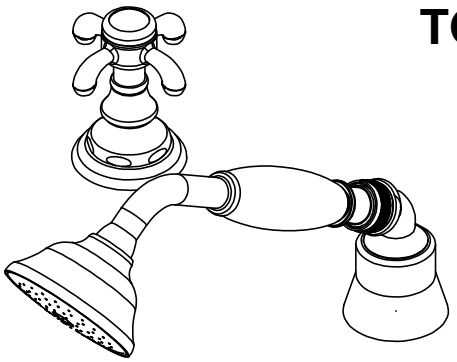

Codes/Standards

Products meets or exceeds the following:

- *ASME A112.18.1/CSA B125.1*
- *CEC/ DOE/ EPA WaterSense*
- *Commonwealth MA*

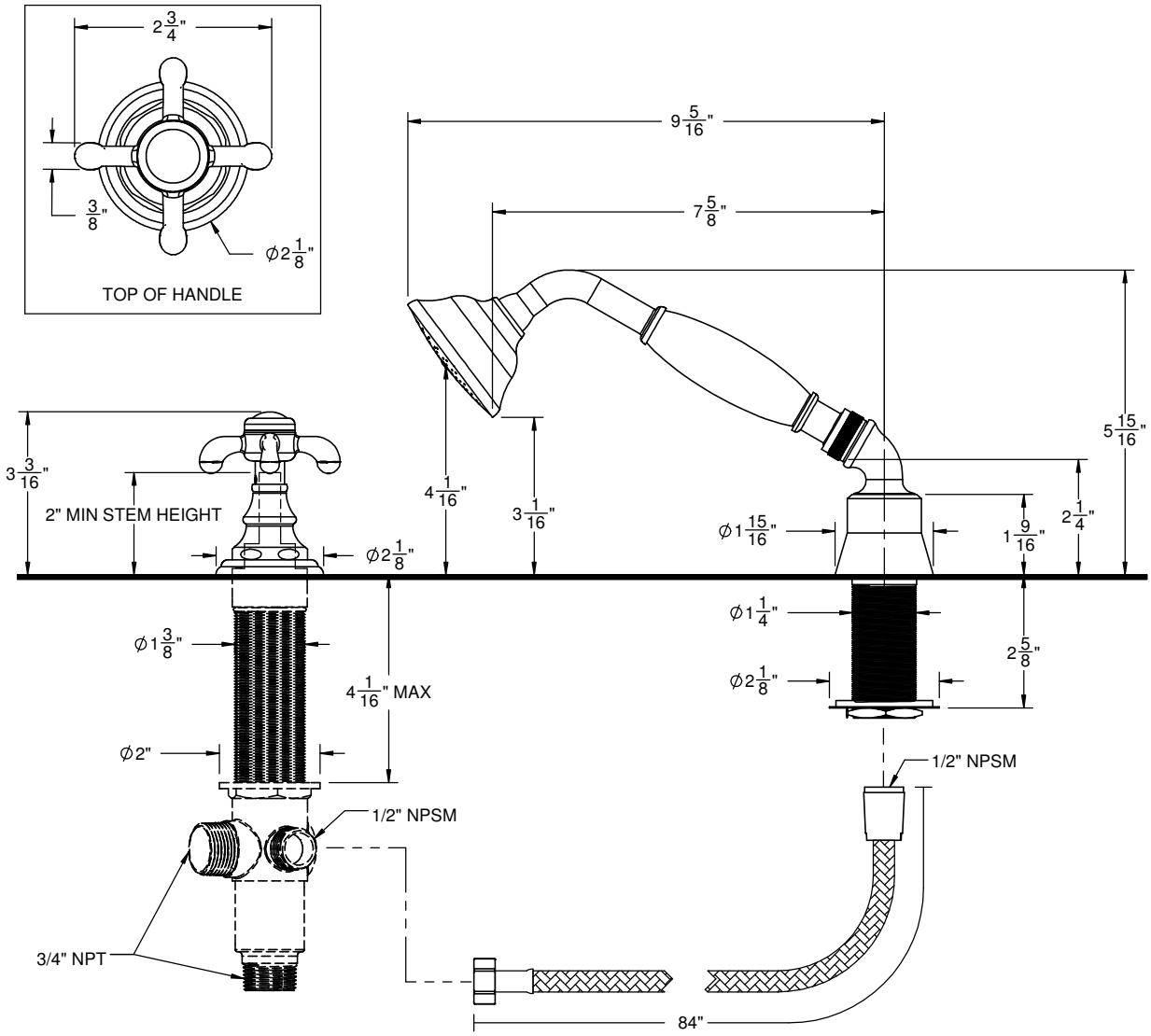

THROUGH-HOLE SPECIFICATIONS	MIN	RECOMMENDED
SHOWER:	Ø1-1/4"	Ø1-1/4"
VALVE:	Ø1-7/16"	Ø1-1/2"

SPECIFICATIONS SUBJECT TO CHANGE WITHOUT NOTICE

ALL DIMENSIONS SHOWN TO NEAREST 1/16"