California Faucets®

# MULTI-SERIES

## DECK TRIM DIVERTER

## TO-34.1
## WE-TO-34.1

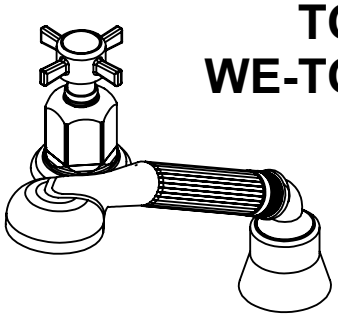

### Features

- *Over 30 finishes including 14 PVD finishes*
- *Solid brass construction*
- *Handshower: Maximum flow rate: 2.5 gpm (9.5 L/m) or 2.0 gpm (7.6 L/m) for "WE" (water efficent) model*
- *Handshower: 1/2" MIP inlet with self-clean rubber jets*
- *Handshower elbow: 1/2" FIP swivel nut with1/2" MIP inlet*
- *Hose: 84" Black poly braided hose. Provides durable, quiet & no damage to trim finish during operation*
- *Diverter valve (DDV-R) sold separately*
- *For additional product offerings, see www.californiafaucets.com*

### Codes/Standards Applicable

Meets or exceeds the following at date of manufacture:

- *ASME A112.18.1/CSA B125.1*

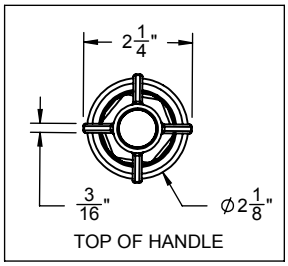


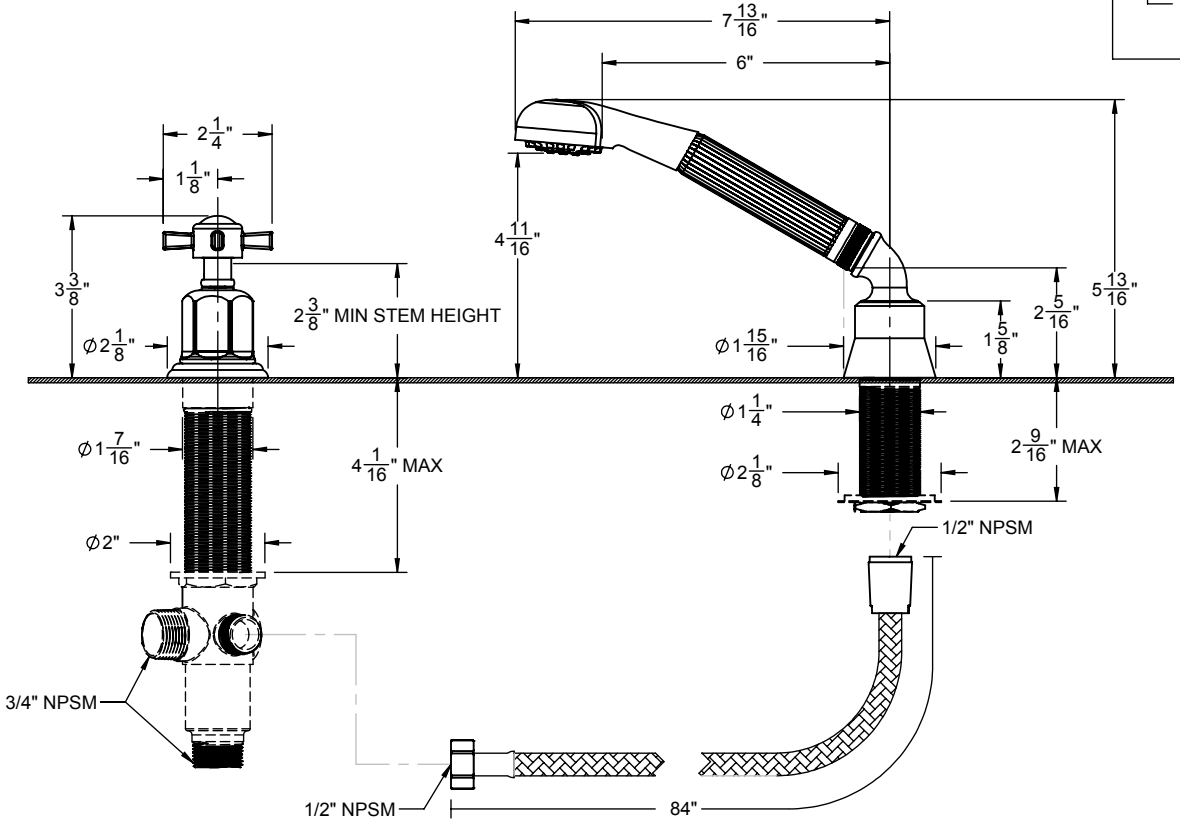


THROUGH-HOLE SPECIFICATIONS

| | MIN | RECOMMENDED |
|---|---|---|
| SHOWER: | Ø 1-1/4" | Ø1-1/4" |
| VALVE: | Ø 1-7/16" | Ø1-1/2" |

ALL DIMENSIONS SHOWN TO NEAREST 1/16"