California Faucets®

CHRISTOPHER**GRUBB** Collection

Doheny®

Handshower Swivel and Supply Elbow

SH-25S-C2

Features

- *25+ artisan finishes including 12 PVD finishes*
- *All brass construction*
- *1/2" NPT (female) inlet connection*
- *1/2" NPSM (male) outlet connection*
- *Positive-Lock swivel holder*
- *Accepts most conical handshower hoses*

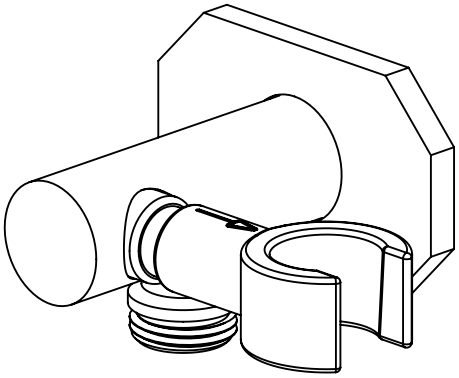

Codes/Standards Applicable

Product meets or exceeds the following:

- *A112.18.1/CSA B125.1*

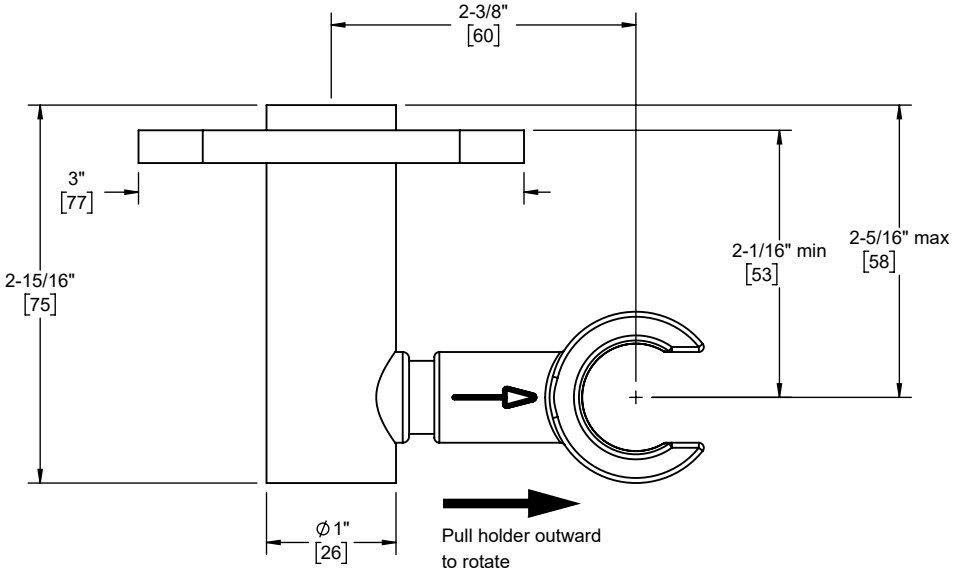

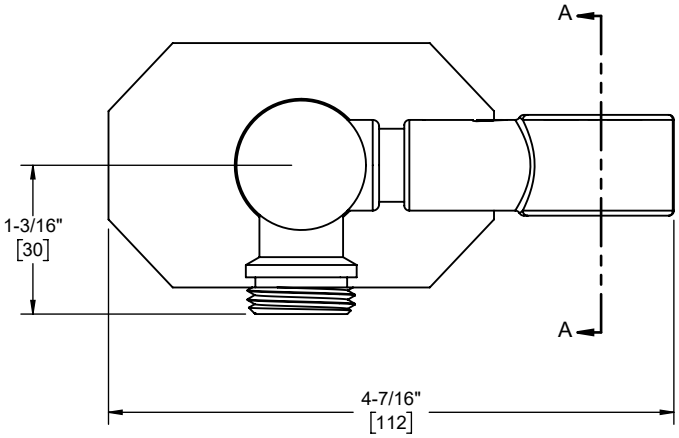

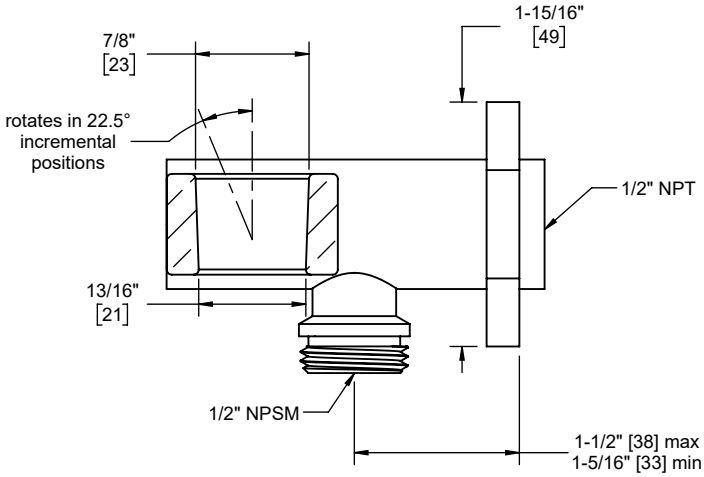

SECTION A-A

Specifications subject to change without notice

Dimensions are inches, rounded to 1/16"
[Dimensions in brackets are mm, rounded to 1mm]