California Faucets®

StyleFlow® KLIK™

4-5/16" MULTI-FUNCTION PUSHBUTTON HANDSHOWER

HS-472.25
HS-472.18

Features

- *1/2" MIP inlet*
- *2 function handshower: rain & massage*
- *Self-cleaning rubber jets*
- *ABS body*
- *4-5/16" diameter*
- *Replace .FR with desired max flow rate:*
  - *HS-472.25 for 2.5 gpm*
  - *HS-472.18 for 1.8 gpm*
- *Available in PC, SN & PN only*

Codes/Standards Applicable

Product meets or exceeds the following:

- *ASME A112.18.1/CSA B125.1*
- *CEC (1.8 gpm)*
- *DOE (1.8 & 2.5 gpm)*
- *Commonwealth of MA*

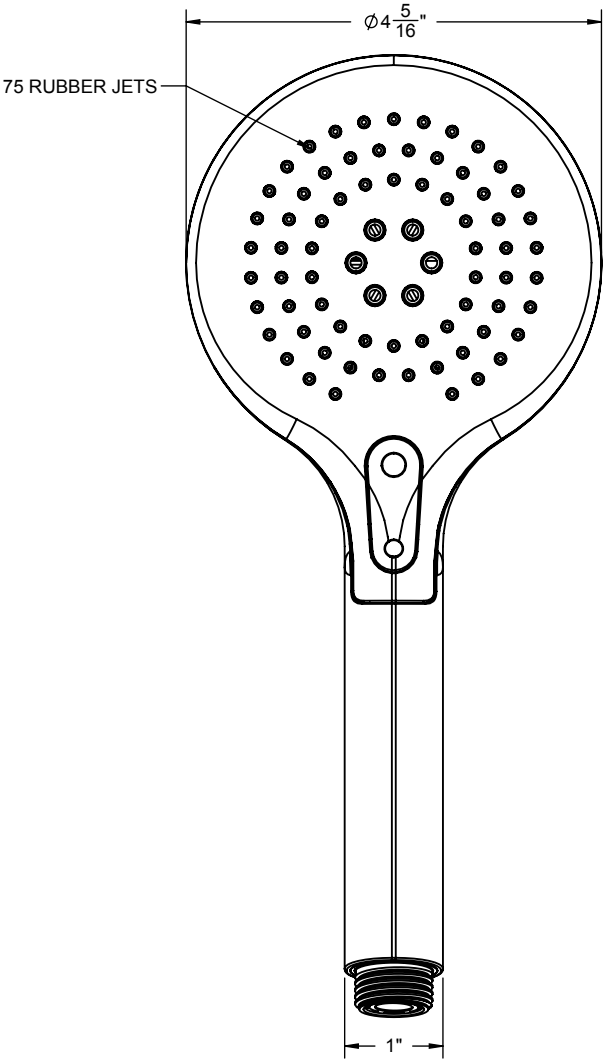

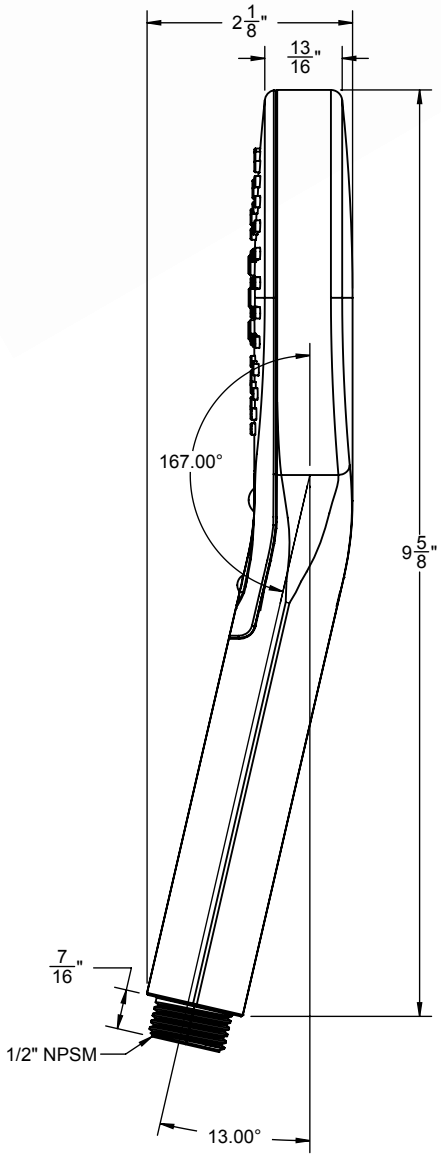

SPECIFICATIONS SUBJECT TO CHANGE WITHOUT NOTICE

ALL DIMENSIONS SHOWN TO NEAREST 1/16"