California Faucets®

Bel Canto™

SINGLE HOLE LAVATORY FAUCET

CF-E301-1
CF-E301CY-1
CF-E301BCY-1

Features

- *4-3/4" spout center to center*
- *Single handle operation cartridge with ceramic disk*
- *Flexible braided hoses for ease of installation*
- *∅ 1-1/4" all brass touch style pop up drain assembly*
- *1.2 gpm (4.5 L/m) max flow rate*
- *All brass construction*
- *Over 30 finishes including 15 PVD finishes*

Codes/Standards Applicable

Product meets or exceeds the following:

- *ASME A112.18.1/CSA B125.1*
- *NSF/ANSI 61 & NSF/ANSI 372*
- *CEC / DOE*
- *Commonwealth of MA*
- *EPA WaterSense High Efficiency Lavatory Faucet*
- *ADA compliant*

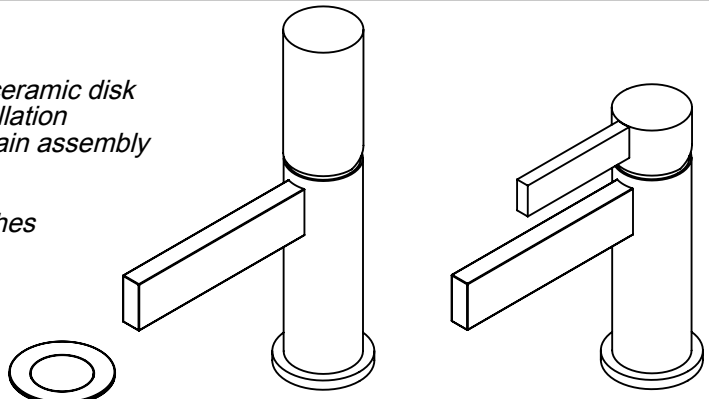

CF-E301CY-1 SHOWN *CF-E301-1 SHOWN*

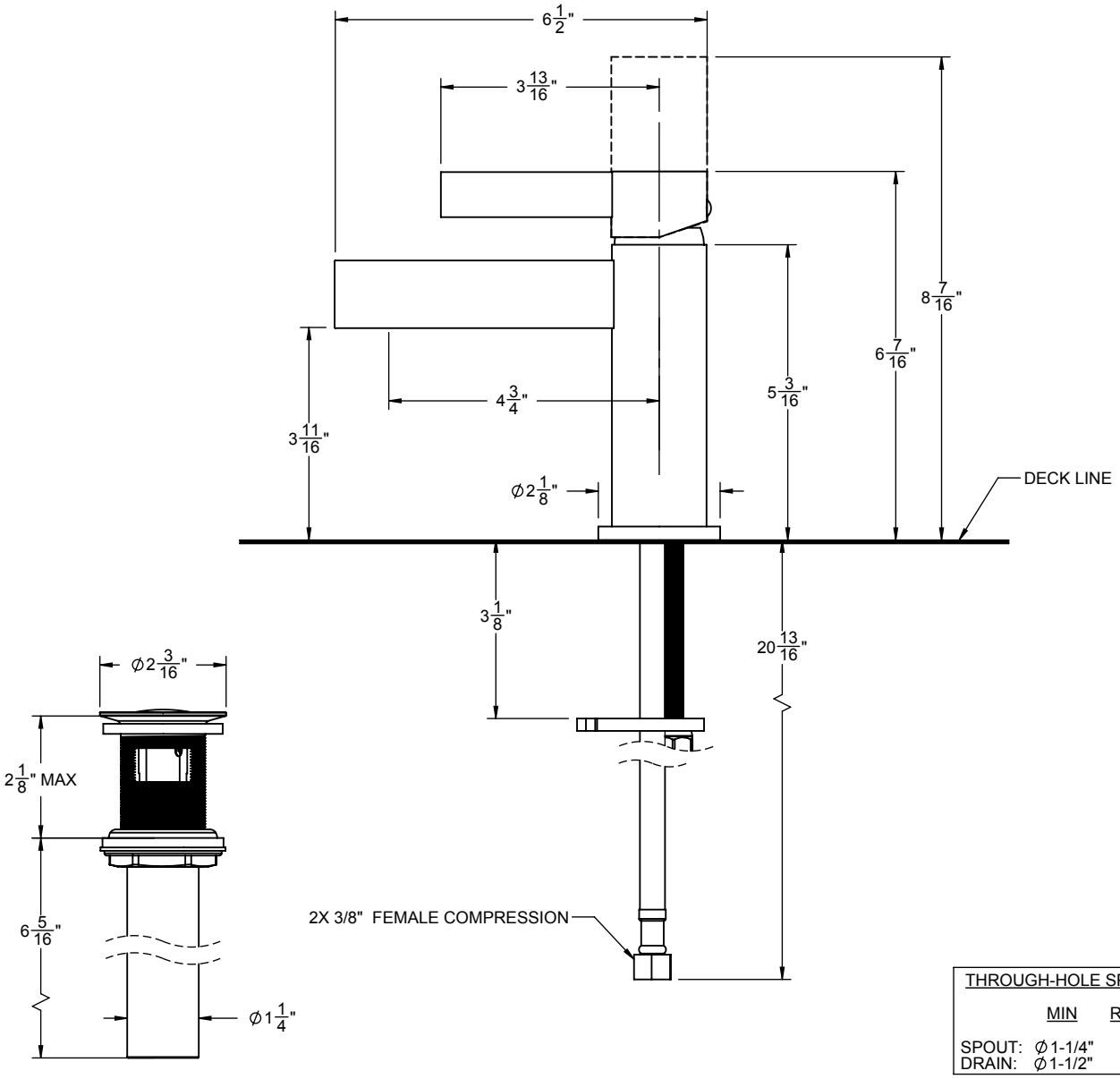

THROUGH-HOLE SPECIFICATIONS	MIN	RECOMMENDED
SPOUT:	∅1-1/4"	∅1-1/2"
DRAIN:	∅1-1/2"	∅1-3/4"

SPECIFICATIONS SUBJECT TO CHANGE WITHOUT NOTICE

ALL DIMENSIONS SHOWN TO NEAREST 1/16"