California Faucets®

# Morro Bay™

## SINGLE HOLE LAVATORY FAUCET

**CF-7701-2**

### Features
- *4-7/8" spout center to center*
- *Single handle operation cartridge with ceramic disc*
- *Flexible braided hoses for ease of installation*
- *Flush mount aerator insert*
- *1.2 gpm (4.5 L/min) max flow rate*
- *All brass construction*
- *Over 30 finishes including 15 PVD finishes*

### Codes/Standards
Product meets or exceeds the following:
- *ASME A112.18.1/CSA B125.1*
- *NSF/ANSI 61 & NSF/ANSI 372*
- *CEC / DOE*
- *EPA WaterSense High Efficiency Lavatory*
- *Commonwealth of MA*
- *ADA compliant*

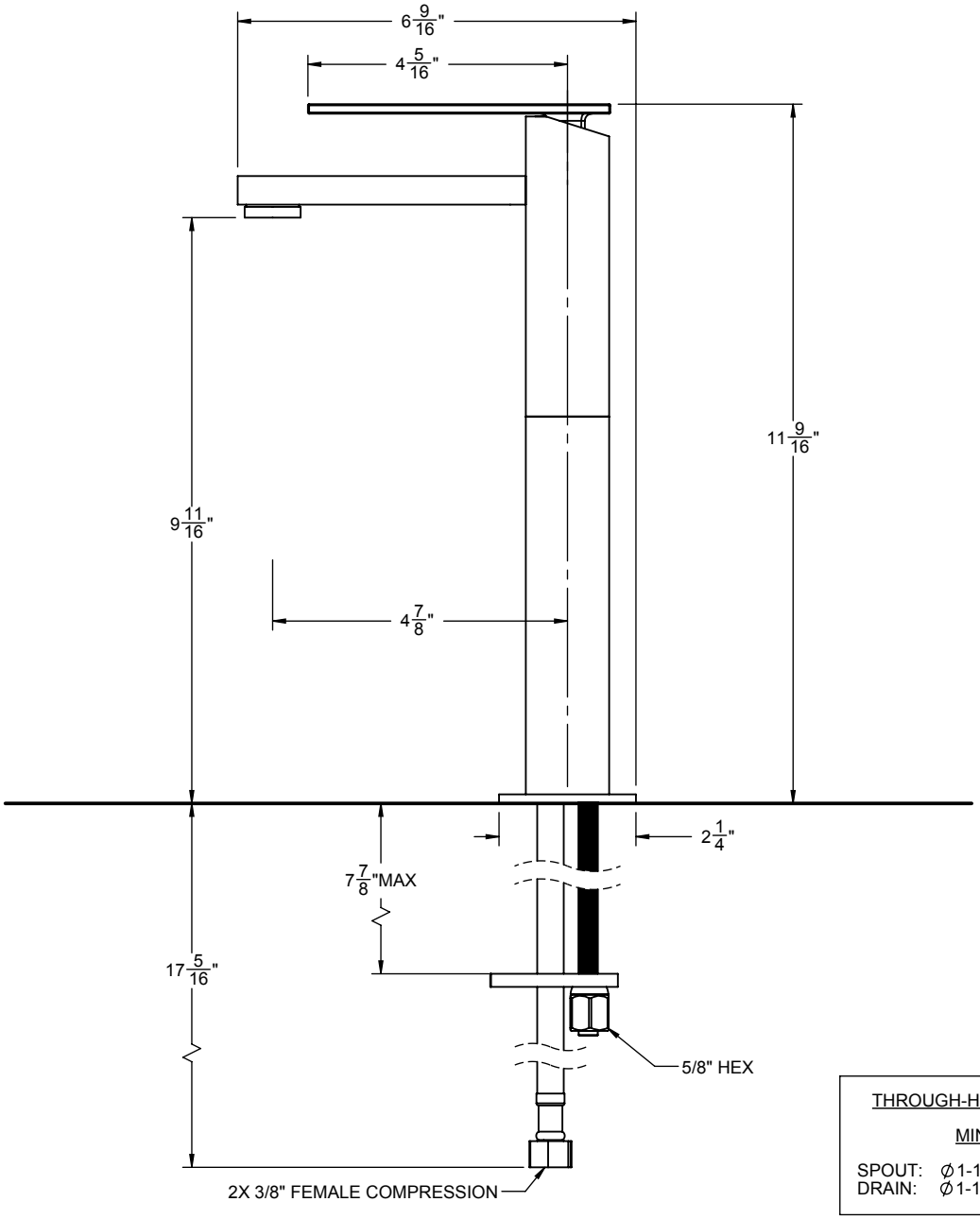


THROUGH-HOLE SPECIFICATIONS

| | MIN | RECOMMENDED |
|---|---|---|
| SPOUT: | ∅1-1/4" | ∅1-3/8" |
| DRAIN: | ∅1-1/2" | ∅1-3/4" |

SPECIFICATIONS SUBJECT TO CHANGE WITHOUT NOTICE

ALL DIMENSIONS SHOWN TO THE NEAREST 1/16"