California Faucets®

Steampunk Bay™

ROMAN TUB SET

8608
8608W
8608B

Features

- *Max flow rate: 16 gpm (60.6 L/min)*
- *Includes rough in valves*
- *1/4 turn ceramic disc cartridges*
- *All brass construction*
- *Over 30 finishes including 15 PVD finishes*

8608 SHOWN

Codes/Standards Applicable

Product meets or exceeds the following:

- *ASME A112.18.1/CSA B125.1*
- *Commonwealth of MA*
- *ADA compliant (with lever handles)*
- *Local codes may reqire installation of an upstream tempering valve*

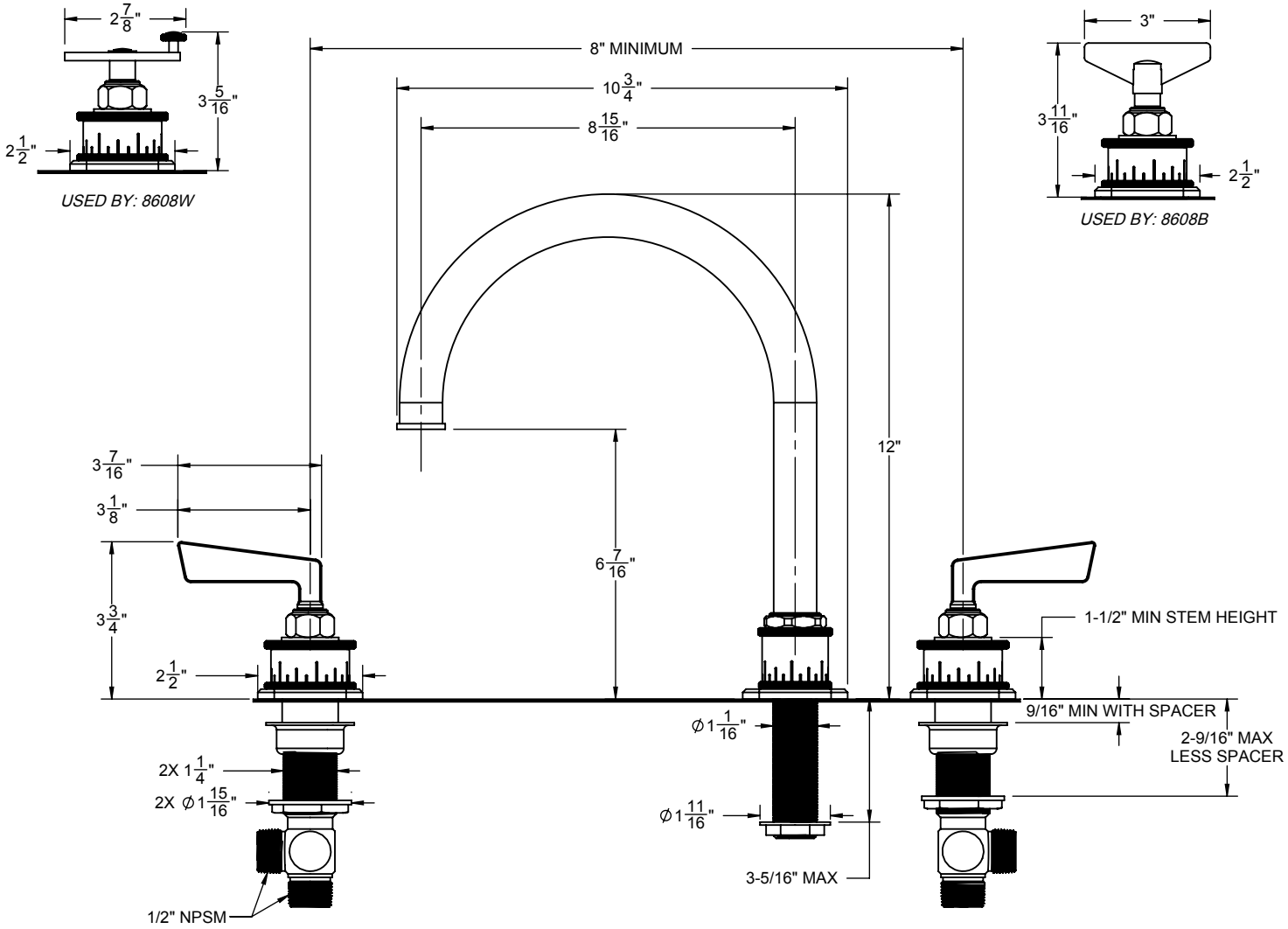

THROUGH-HOLE SPECIFICATIONS

	MIN	RECOMMENDED	MAX
SPOUT:	Ø1-1/16"	Ø1-3/8"	Ø1-1/2"
VALVE:	Ø1-1/4"	Ø1-3/8"	Ø1-1/2"

SPECIFICATIONS SUBJECT TO CHANGE WITHOUT NOTICE

ALL DIMENSIONS SHOWN TO NEAREST 1/16"