California Faucets®

Palomar®

TRADITIONAL WALL MOUNT TUB FILLER WITH HANDSHOWER

1306-XX.13M.20
1306-XX.13M.18
1306-XX.20
1306-XX.18

Features

- *Tub filler maximum flow rate: 15 gpm (58.6 L/min) at 60 psi*
- *Handshower flow rate: 2.0 gpm (7.6 L/min) or 1.8 gpm (6.8 L/min)*
- *1/4 turn ceramic disc cartridges*
- *All brass construction*
- *Over 30 finishes including 15 PVD finishes*

Codes/Standards Applicable

Product meets or exceeds the following:

- *ASME A112.18.1/CSA B125.1*
- *CEC (1.8 gpm) / DOE (2.0 & 1.8 gpm)*
- *Commonwealth of MA*
- *EPA WaterSense handshower (2.0 gpm)*
- *ADA compliant (with lever handles)*
- *Local codes may require installation of an upstream tempering valve*

1306-33.FR SHOWN

XX = DENOTES HANDLE SERIES

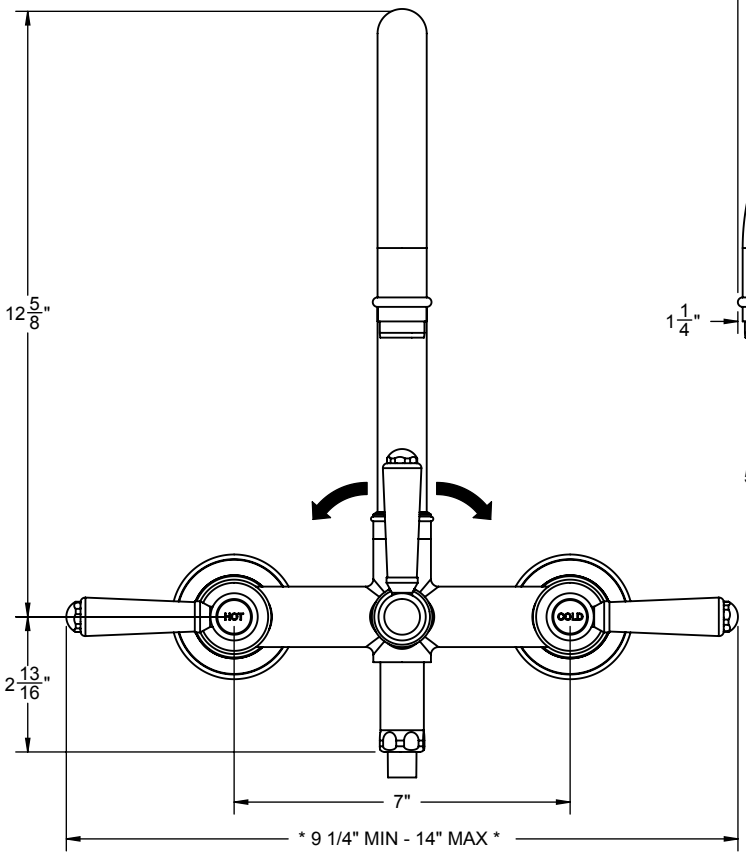

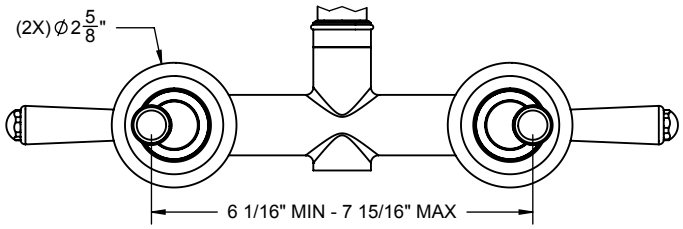

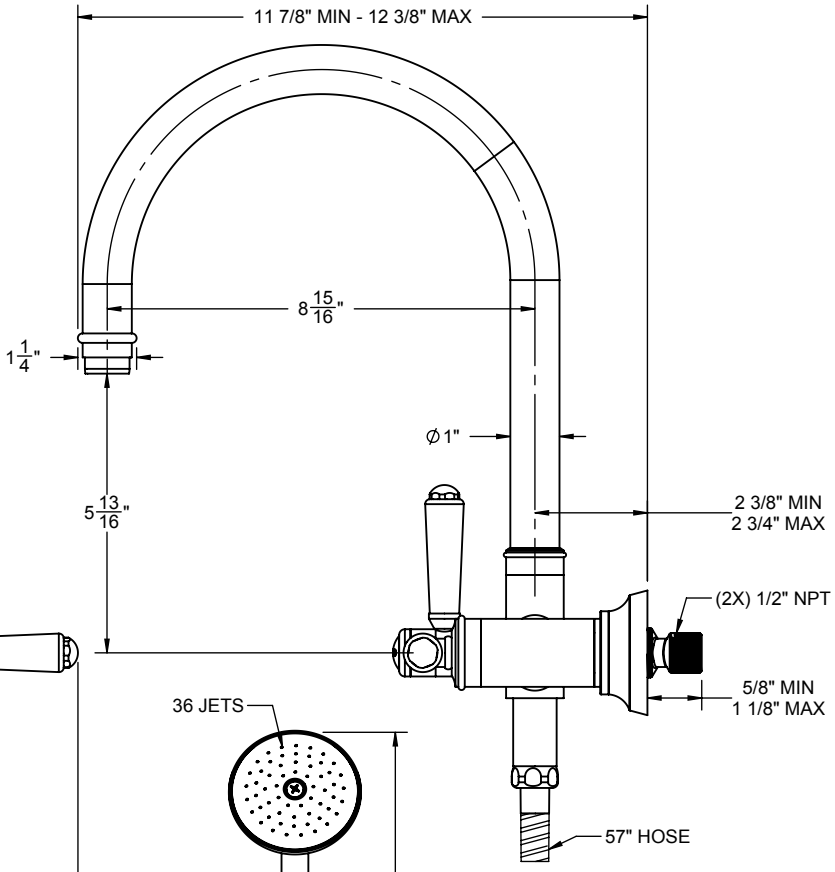

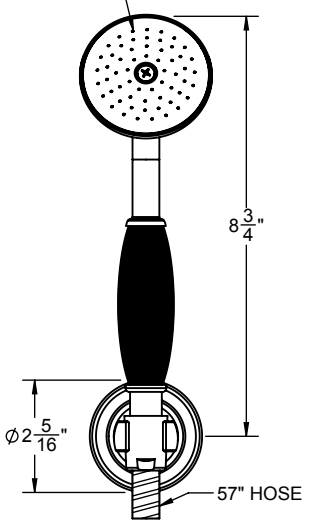

* = DIMENSION VARIES BASED ON HANDLE SERIES

(1X) PLASTIC #8-10 FINNED ANCHOR

(1X) #10 X 2 STAINLESS STEEL SCREW

THROUGH-HOLE SPECIFICATIONS		
MIN	RECOMMENDED	MAX
Ø1-13/16"	Ø1-7/8"	Ø2"

SPECIFICATIONS SUBJECT TO CHANGE WITHOUT NOTICE

ALL DIMENSIONS SHOWN TO NEAREST 1/16"