33” OTERO DOUBLE BOWL APRON-FRONT SINK

Cat. No
FSCDB3546-SAC

BARCLAY

W:	33”
D:	21-¾”
H:	9-½”

***Please do NOT cut hole without template or actual product.**

Interior Dimensions:

Large
Basin Interior: 16“ W x 18” D

Small
Basin Interior: 13” W x 18” D

Basin depth: 9-¼”

Features:

- ►Constructed of solid 16 gauge copper
- ►Smooth front
- ►Rounded interior corners easy for cleaning
- ►Sink bowl has no internal welds
- ►Sink bottom angled to drainage
- ►Accommodates 3-½” drain
- ►Front rim 2-½, back and side rims 1-½”
- ►Patina applied to copper using French hot process
- ►Hand polished finish
- ►Copper is a living finish and will patina over time

Finish:
SAC Smooth Antique Copper

Due to the handmade nature of this product, variations in size and finish may occur. Such variations do not constitute manufacturer defects.

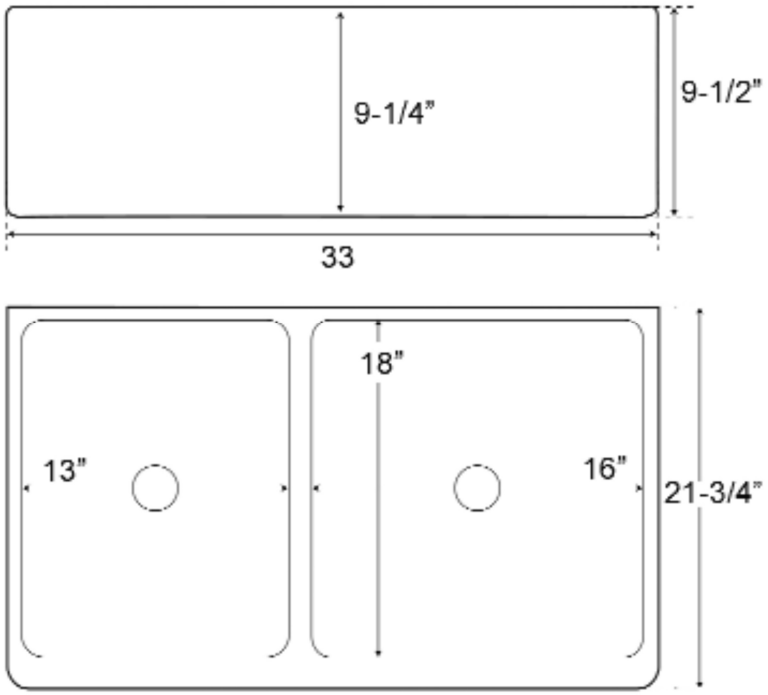

Dimensions of fixture are nominal and may vary within the range of tolerances established by ANSI Standard A112.19.2.
Dimensions and specifications subject to change without notice.