hansgrohe

AXOR MyEdition
Widespread Faucet 70 without Plate, 1.2 GPM, without Pop-up Drain
Finish: **matte black** Part no. : **47052671**

Description

Features

- Spout height: 3 Inch
- Handle variant: Lever
- Spray modes: PowderRain
- Max. flow: 1.2 GPM (4.5 L/Min)
- Ceramic valves hot/cold 90°

Item details

List Price	$ 2,153.00

Technology

EcoRight
Quick Clean
Comfort Zone

Compliance / Sustainability

ADA
WaterSense Meets EPA Criteria Certified by IAPMO R&T
UPC
MAP

Product image

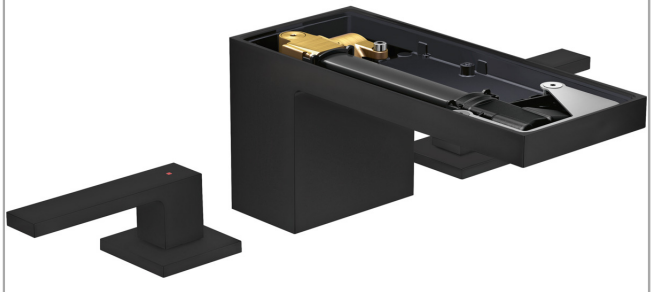
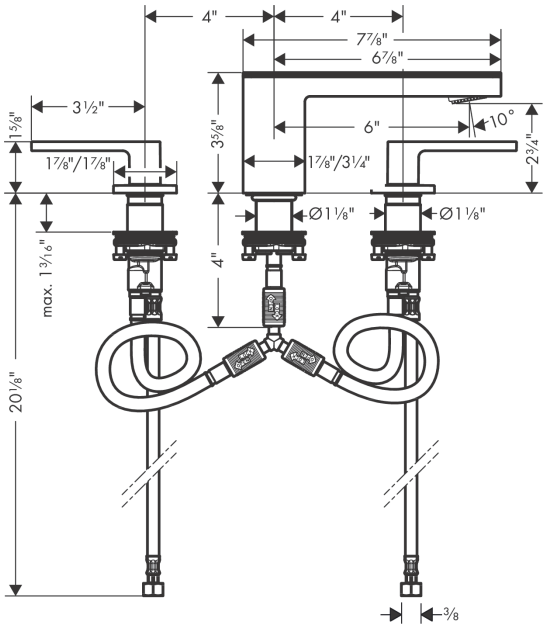
Scale drawing