AXOR

AXOR Starck Organic
Electronic Faucet with Preset Temperature Control, 0.5 GPM
Finishes : **chrome** Part no. : **12172001**

Description

Features

- Shower spray pattern
- Flow: 0.5 GPM (1.9 L/Min)
- Theft-proof aerator
- Pre-set temperature
- Infrared sensor
- Battery operated (battery type 6V CR-P2, included) with low battery indicator
- Temporary water stop feature for cleaning
- ⅜" hoses

Technology

Product image
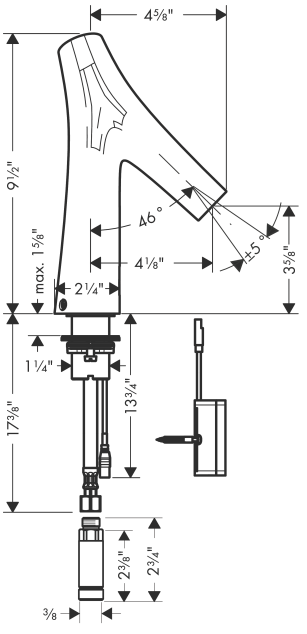
Scale drawing