hansgrohe

AXOR Starck
Freestanding Tub Filler Trim with Lever Handle and 1.75 GPM Handshower
Finish: **brushed nickel** Part no. : **10455821**

Description

Item details

List Price	$ 3,576.00

Compliance / Sustainability

Product image
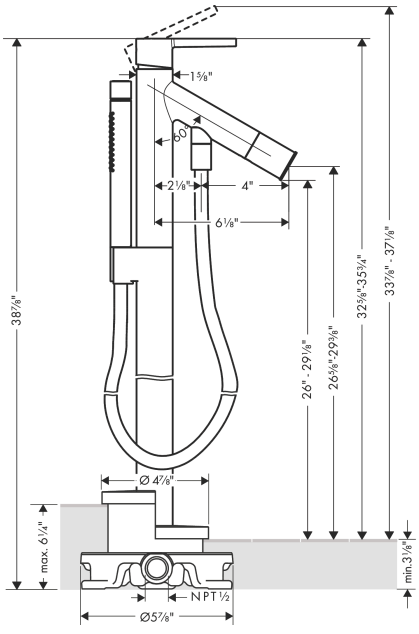
Scale drawing