DAVISVILLE COLLECTION

ONE PIECE TOILET
TL-1423HCA-EW

PRODUCT FEATURES

3.5LPF/0.92GPF High efficiency
Vitreous china
Avenue white
16½" bowl height
Elongated bowl with concealed skirted trapway
Unlined tank
Chrome top push button
High quality Fluidmaster tank fittings
Smooth close, quick release slim design toilet seat included
Plastic side caps included

DIMENSIONS

14¼" (W) X 28⅜" (D) x 29¾" (H)
362mm (W) x 720mm (D) x 755mm (H)

SHIPPING

Cube: 8.66 **GW:** 116 lbs

COMPLIANCE CERTIFICATIONS

Meets or exceeds the following:
IAPMO cUPC
ASME A112.19.2 / CSA B45.1
US EPA WaterSense
MaP tested 800g
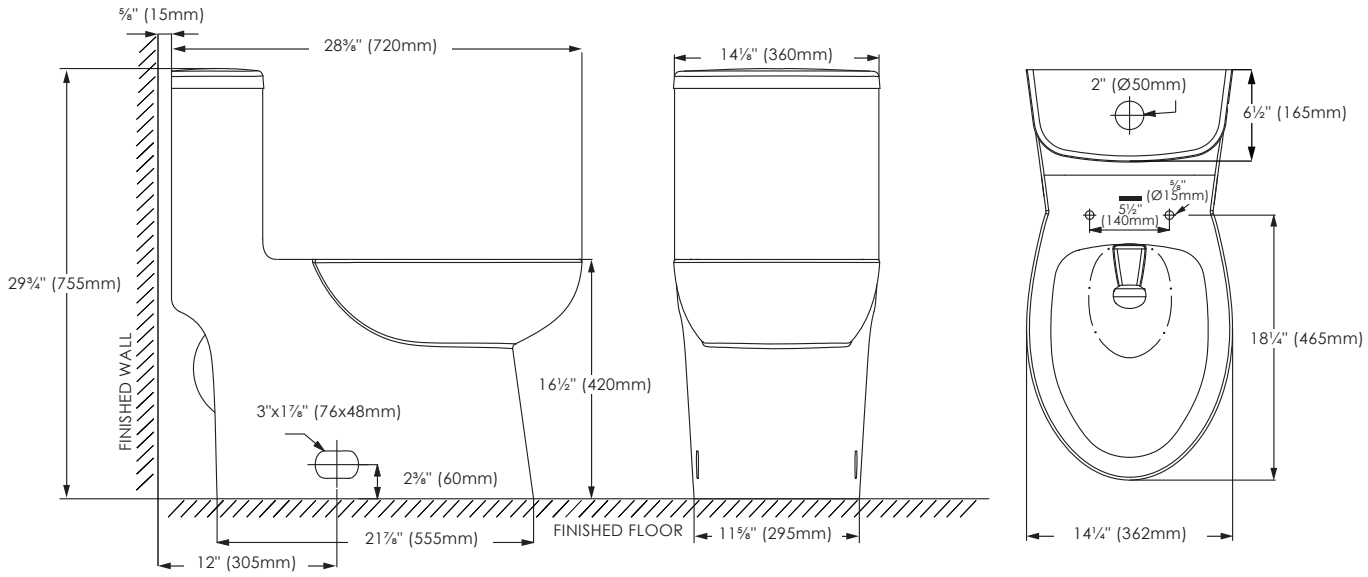
Note: Dimensions of fixtures are nominal and may vary within the range of tolerances established by ASME standard A112.19.2. These measurements are subject to change or cancellation. No responsibility is assumed for use of superseded or voided pages.