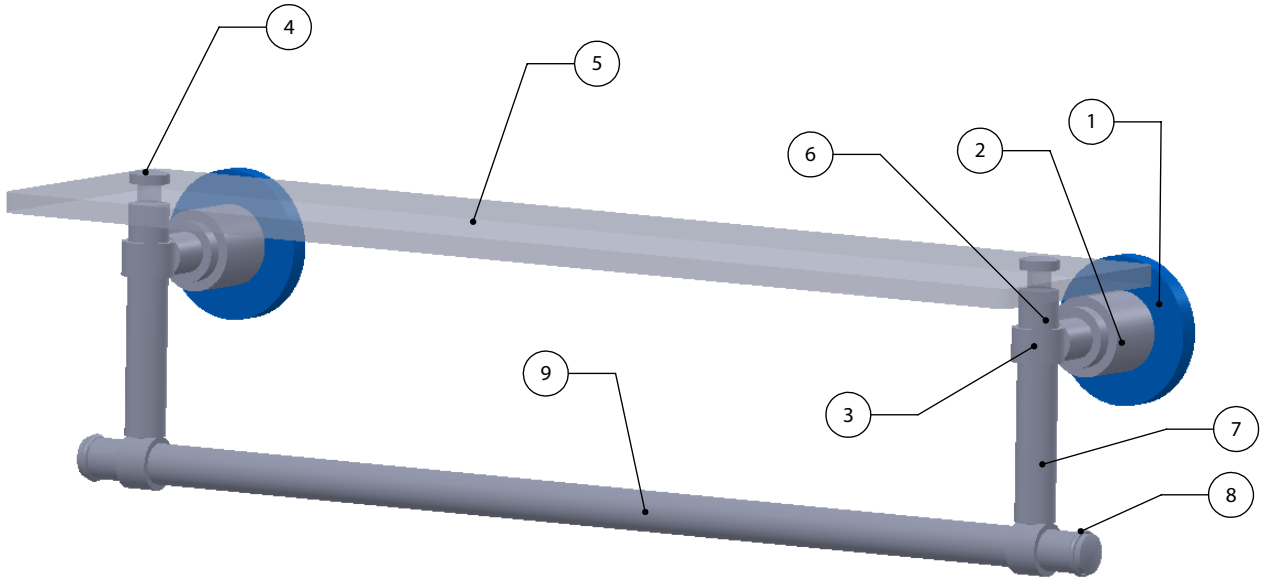

ITEM NO.	PART NUMBER	DESCRIPTION	QTY.
1	BPRD	Base	2
2	WASP	NECK	2
3	HB1T-1	Hub	4
4	CARD-34	END CAP	4
5	GLRT-22	GLASS	2
6	TU34-.75	END TUBE	6
7	TU34-3	LEG	2
8	CRRD-34	RING	2
9	TU34-19	LONG TUBE	1

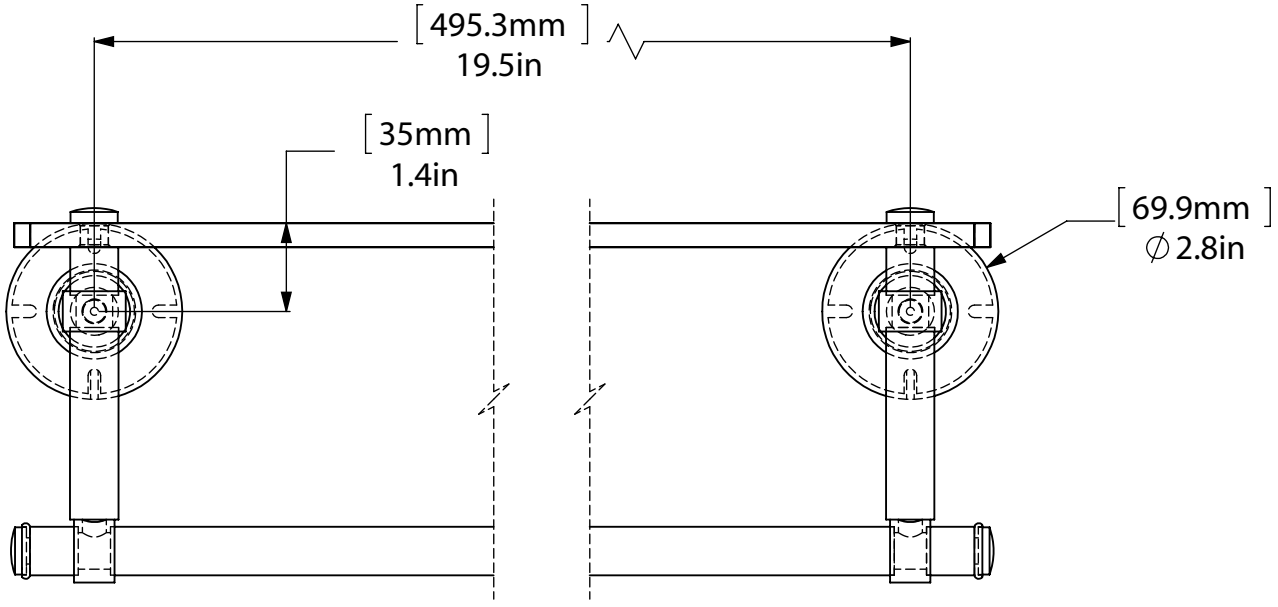

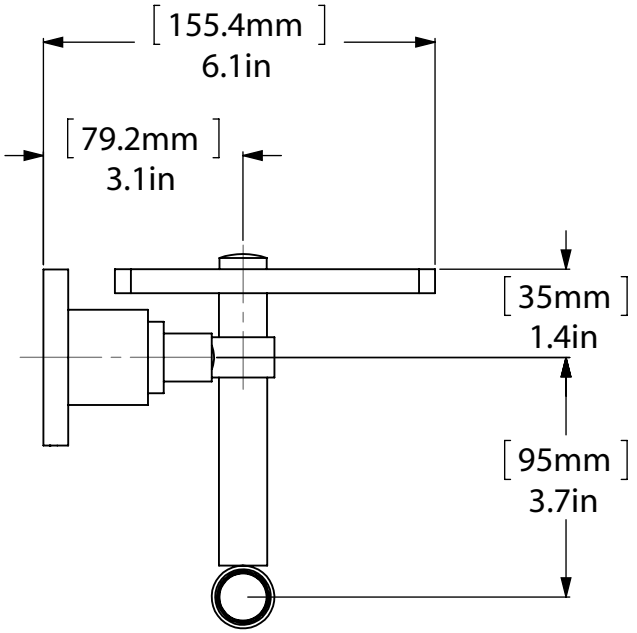

CONFIDENTIALITY/LIMITED LIABILITY STATEMENT
This document (and any files attached to it) is confidential and intended only for the person or entity to which it is delivered. If you are not the intended recipient, then you have received this document by mistake and any use, dissemination, forwarding, printing or copying of this document and its file attachments is prohibited. Please notify ALLIED BRASS INC. immediately either by telephone or by email, delete the misdirected document from your system and destroy any copies you have made of it. We do not accept any liability for any loss or damage which may arise from your receipt of this document.

UNLESS OTHERWISE STATED			INITIALS	DATE	ITEM	QTY	DRG/PART NO	CLIENT:		
DO NOT SCALE	X.XXX	+/-0.025	DESIGNED		IJM	MATERIAL	BRASS	WEIGHT	FINISH	TBD
DRAWING	X.XX	+/-0.1	DRAWN		IJM	HEAT TREAT	NA		QUANTITY	
CHAMFER ALL	X.X	+/-0.25	CHECKED		R. ANDRIS	CUSTOMER		CUSTOMER No	---	
EDGES 0.5X45°	X	+/-0.75	PROJ.ENG			DESCRIPTION:			DRAWING No.	REV
DRAWING ISO	ANGLES		SAFETY			WS-1TB-22			WS-1TB-22	0
	X.XX	+/-0.05°	APPROVED		R. ANDRIS					
	X.X	+/-0.1°	FILENAME	WS-1TB-22					SCALE 1:3	SHEET: 01 A4
FIRST ANGLE PROJECTION	X	+/-0.5°								
	MACHINED FINISH	3.2								