| ITEM NO. | PART NUMBER | DESCRIPTION | QTY. |
|---|---|---|---|
| 1 | BPPR | Back Plate | 2 |
| 2 | GLRT-16 | GLASS | 1 |
| 3 | CRRD-12 | Connector | 8 |
| 4 | TU12-1.8 | Tube-12, L=1.8 | 2 |
| 5 | MR-TILT-FITT | HUB-CON | 2 |
| 6 | TU12-2 | Tube-12, L=2 | 2 |
| 7 | HBTTT-78 | Hub | 2 |
| 8 | CARD-58 | LOCK | 2 |
| 9 | TU38-13.5 | TUBE -38,L=13.5 | 2 |

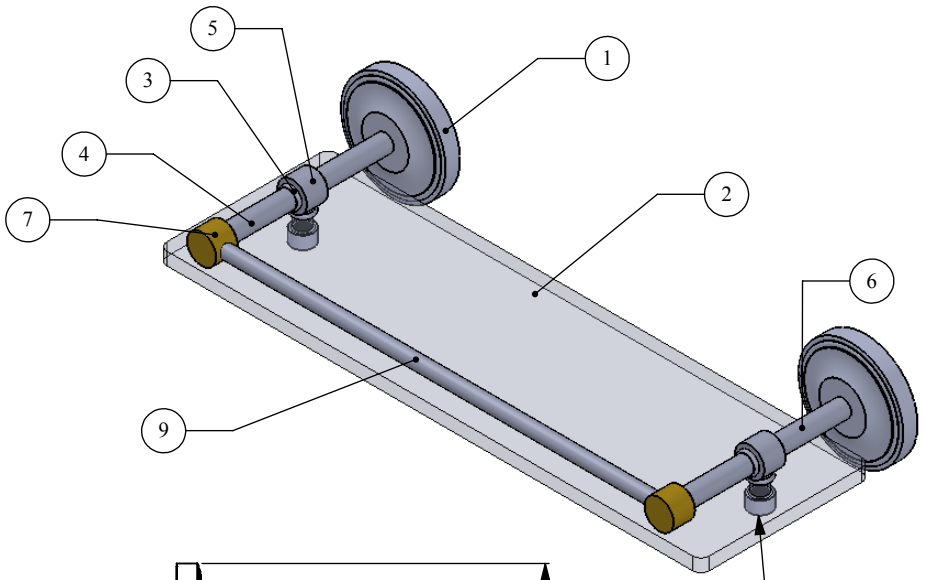


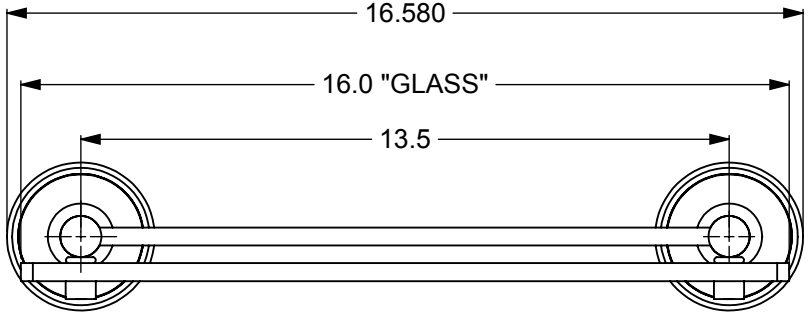


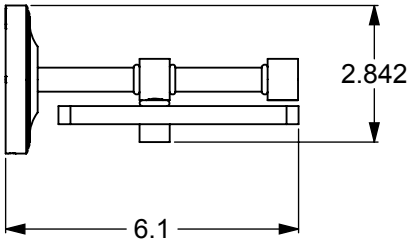


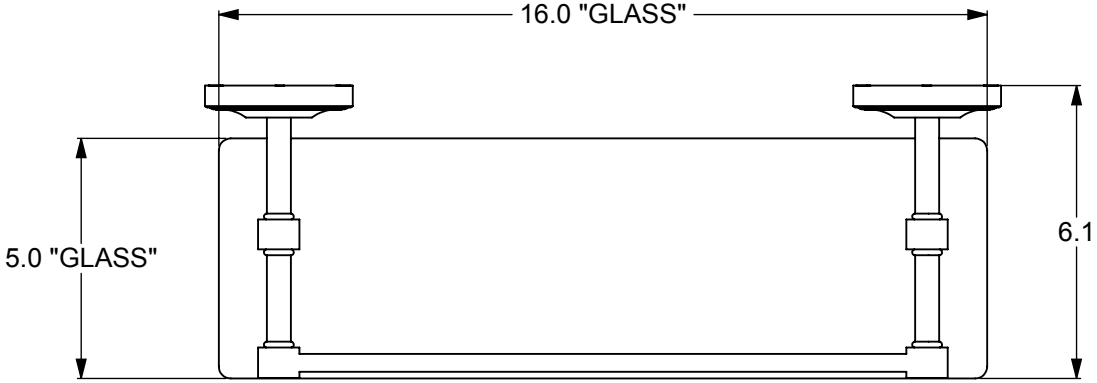



CONFIDENTIALITY/LIMITED LIABILITY STATEMENT
This document (and any files attached to it) is confidential and intended only for the person or entity to which it is delivered. If you are not the intended recipient, then you have received this document by mistake and any use, dissemination, forwarding, printing or copying of this document and its file attachments is prohibited. Please notify ALLIED BRASS INC. immediately either by telephone or by email, delete the misdirected document from your system and destroy any copies you have made of it. We do not accept any liability for any loss or damage which may arise from your receipt of this document.


UNLESS OTHERWISE STATED

DO NOT SCALE
DRAWING
CHAMFER ALL
EDGES 0.5X45°
DRAWING ISO

FIRST ANGLE PROJECTION

| | |
|---|---|
| X.XXX | +/-0.025 |
| X.XX | +/-0.1 |
| X.X | +/-0.25 |
| X | +/-0.75 |

**ANGLES**

| | |
|---|---|
| X.XX | +/-0.05° |
| X.X | +/-0.1° |
| X | +/-0.5° |

MACHINED FINISH 3.2

| | INITIALS | DATE | ITEM | QTY | DRG/PART NO | CLIENT: |
|---|---|---|---|---|---|---|
| DESIGNED | | IJM | MATERIAL | BRASS | WEIGHT | |
| DRAWN | | IJM | HEAT TREAT | NA | | |
| CHECKED | | R. ANDRIS | CUSTOMER | | CUSTOMER No | --- |
| PROJ.ENG | | | DESCRIPTION: | | | |
| SAFETY | | | PRBP-1-16-GAL | | | |
| APPROVED | | R. ANDRIS | | | | |
| FILENAME | PRBP-1-16-GAL | | | | | |

| | |
|---|---|
| FINISH | TBD |
| QUANTITY | |
| DRAWING No. | PRBP-1-16-GAL |
| REV | 0 |
| SCALE | 1:4 |
| SHEET: 01 | A4 |